G GOTOH®

GUITAR & BASS PARTS COLLECTION 1999

SG SERIES

SG30

e.g./SG30-20
SG30-P3E
Finishes/C.GG.B

Mission 1:18

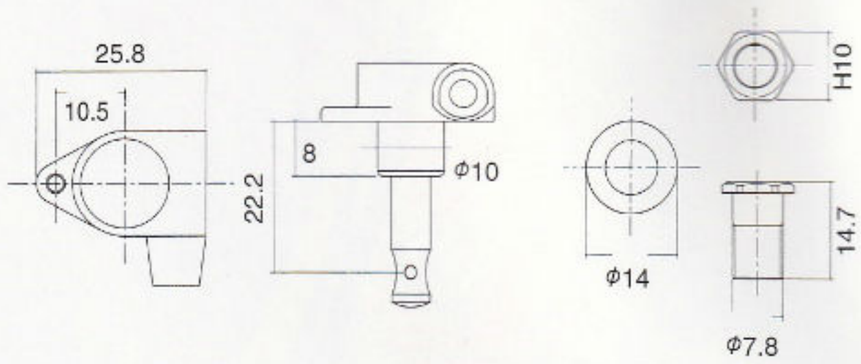

SG36

e.g./SG36-01
SG36-07-L
Finishes/C.GG.B

Mission 1:14

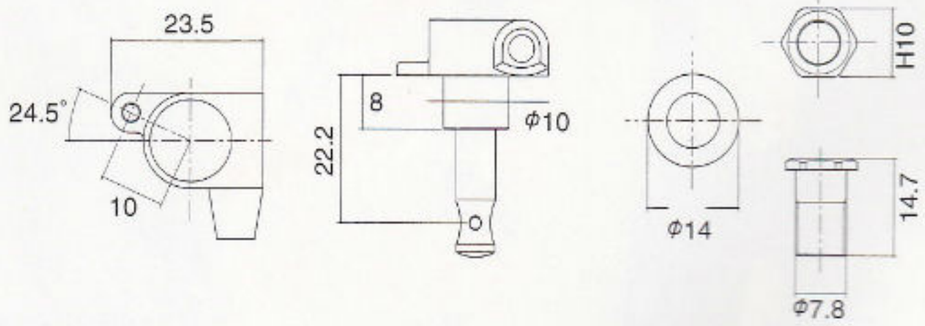

SG38

e.g./SG38-04
SG38-05P2-L
Finishes/C.GG.B

Mission 1:16

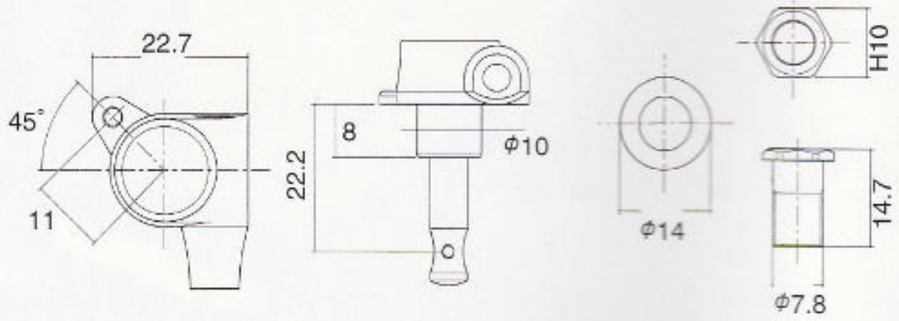

SGE

e.g./SGE
(Same as SGE-07)
SGE-05-R
Finishes/C.B

Mission 1:16

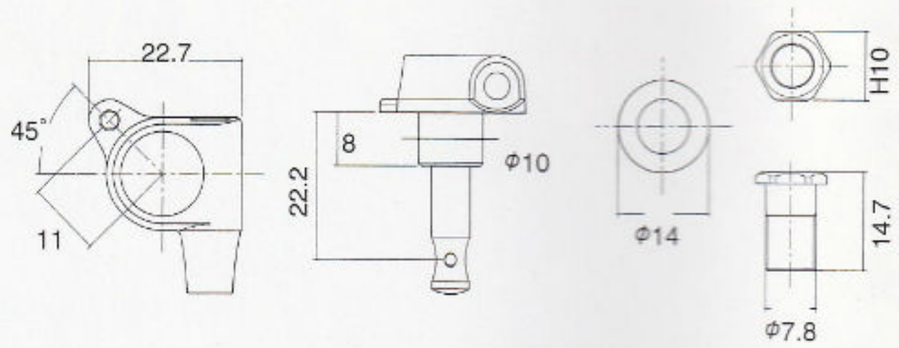

BUTTON OPTION (SG Series)

Choose the number of button from listed as follow when machine heads is ordered.

PROMOTIONAL MODEL

1DC41-01M

Finish/C

Mission 1:14

1DC41-07M

Finish/C

Mission 1:14

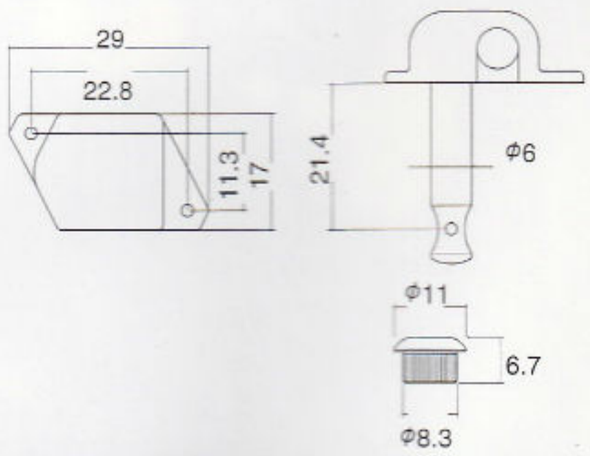

Finishes : N-Nickel C-Chrome GG-Gold B-Black Chrome

SD SERIES

SD90

e.g./SD90-SL
SD90-06M
Finishes/N.GG.B

Mission 1:15

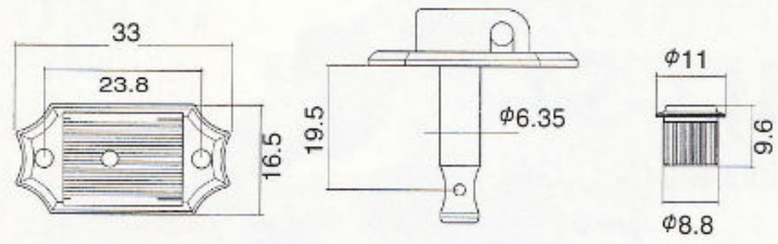

SD91

e.g./SD91-05M-L
SD91-05MA-R
Finishes/N.GG.B

Mission 1:15

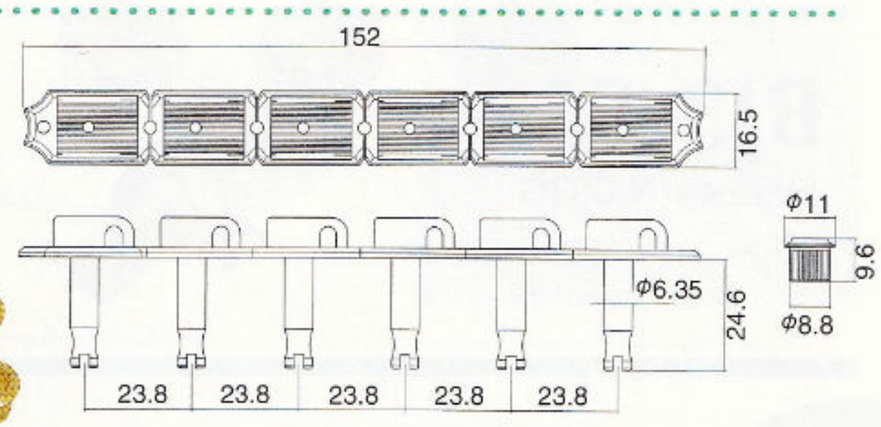

BUTTON OPTION (SD Series)

Choose the number of button from listed as follow when machine heads is ordered.

MAGNUM LOCK

JAPAN Pat.NO.1,685,055/U.S.A. Pat.No.4,827,825

Guitar string coiled around the tuner post is slankened when vibrato arm is down-pressed and it does not return to the original tightness when the arm is released, thus string does not keep staying in tune. To avoid it, locking machine heads are developed, however, it is annoyance to use the ordinary locking system available now in the industry as they are mostly the type of locking by force that causes string slipping or break of string by imperfect adjustment of locking knob put on the machine heads.
Gotoh Magnum Lock can lock the string more constantly as it practically utilizes string tension. Half-turn-tuning is a significant idea. It's a really easy operation.
Loosen the locking nut making a hole for string, then pull the string through the post until there is no slack and turn the tuner button for normal tuning, then it automatically locks the string. After all strings are tuned, you may cut off the surplus strings, then it is completed. To use with non-locking fulcrum tremolo system, it results remarkably well.
Gotoh Magnum Lock is available for all models of SG Series shown on catalog page 1 and SD Series on catalog page 2. Specify the machine heads model and choose MG7 or MG8 according to thickness of your guiter headstock.

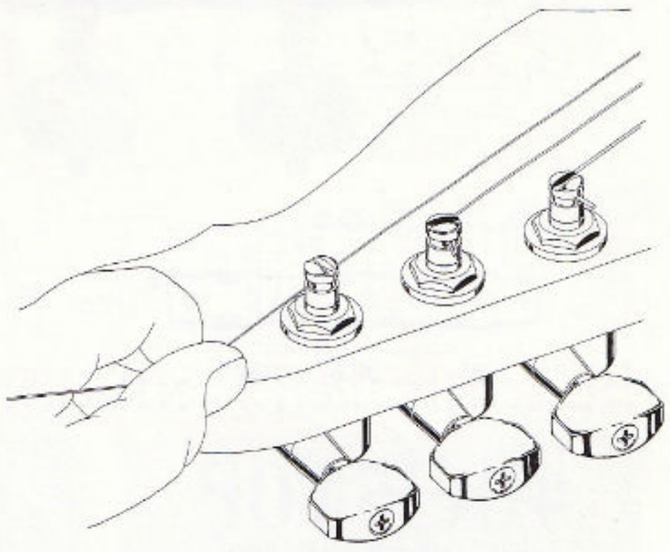

SG Series

e.g./SG36-07-L MG7
SG38-P2E MG7
e.g./SG30-01 MG8
SGE-20 MG8

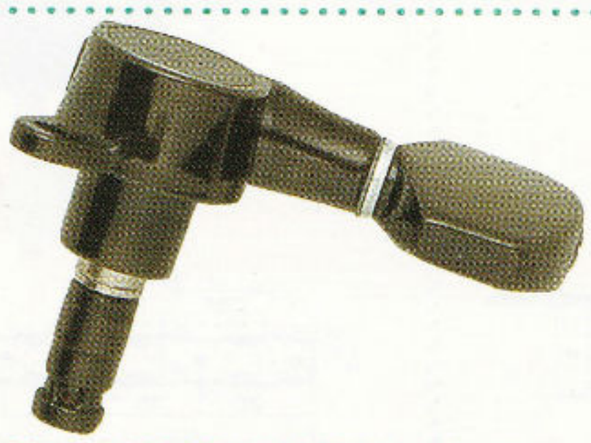

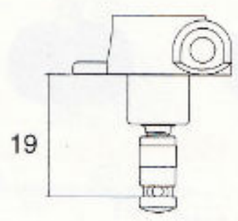

MG7

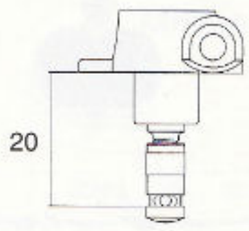

MG8

SD Series

e.g./SD91-05MP2-R MG7
SD91-06M-L MG7
e.g./SD90-05M MG8
SD90-05MA MG8

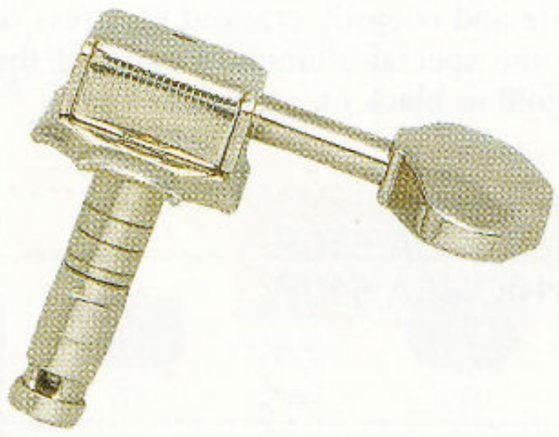

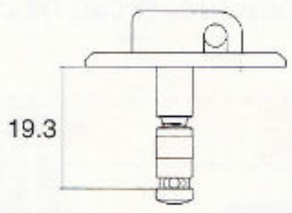

MG7

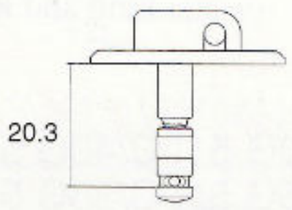

MG8

Banjo Tuner

BJ3-S4
Finishes/N.C.GG

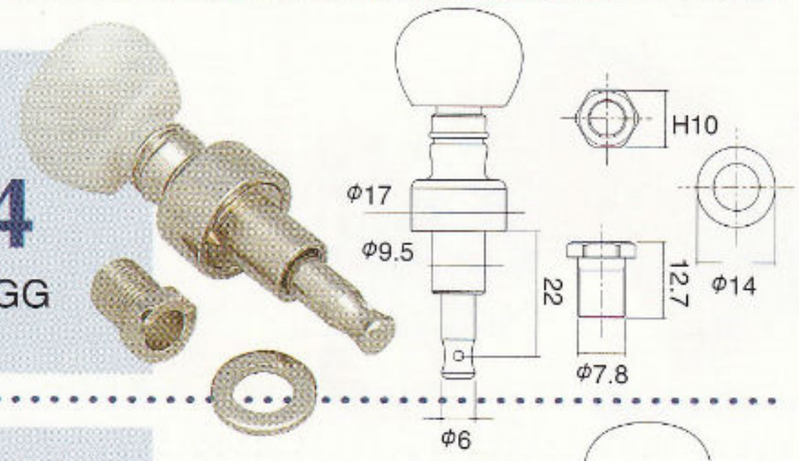

BJ3-S5
Finishes/N.C.GG

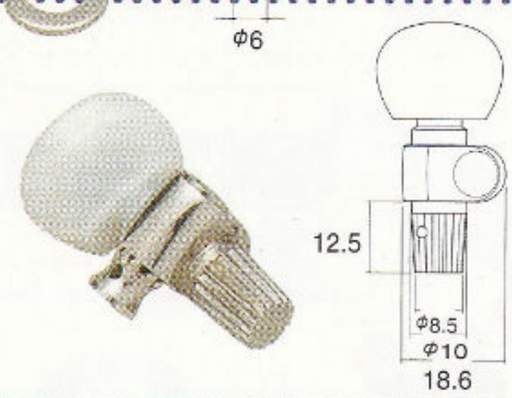

Ukulele Peg

UK-1
Finishes/N.GG
Material/Aluminum

UKB
Finishes/N.GG

Classic Guitar Machine Heads

510 SERIES

Finish/GG Mission 1:16

40G510C
e.g./40G510C-EN

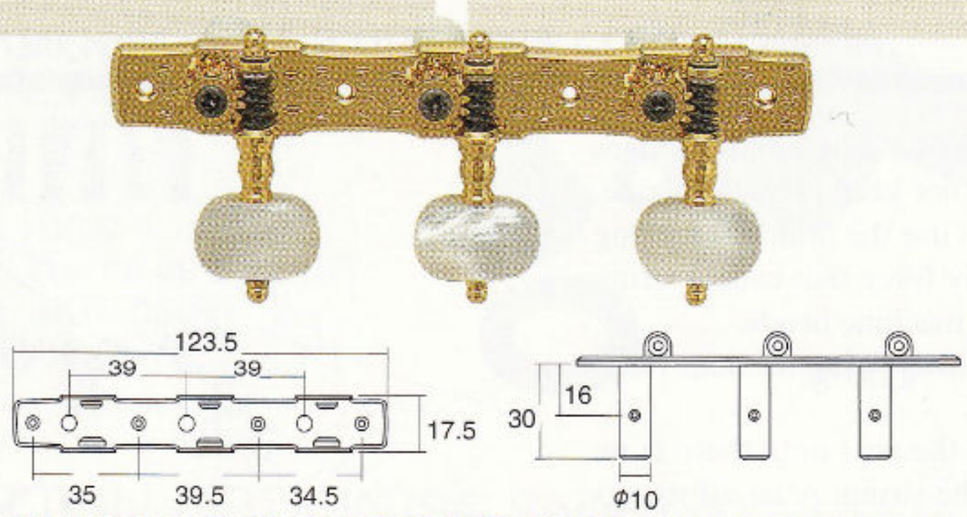

40A510C
e.g./40A510C-M

35G510C
e.g./35G510C-M

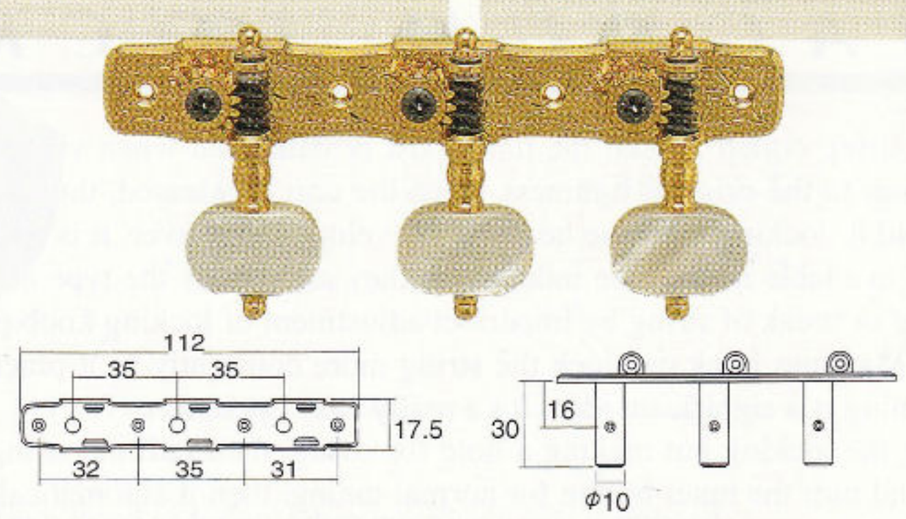

35A510C
e.g./35A510C-P

40G510P
e.g./40G510P-EN

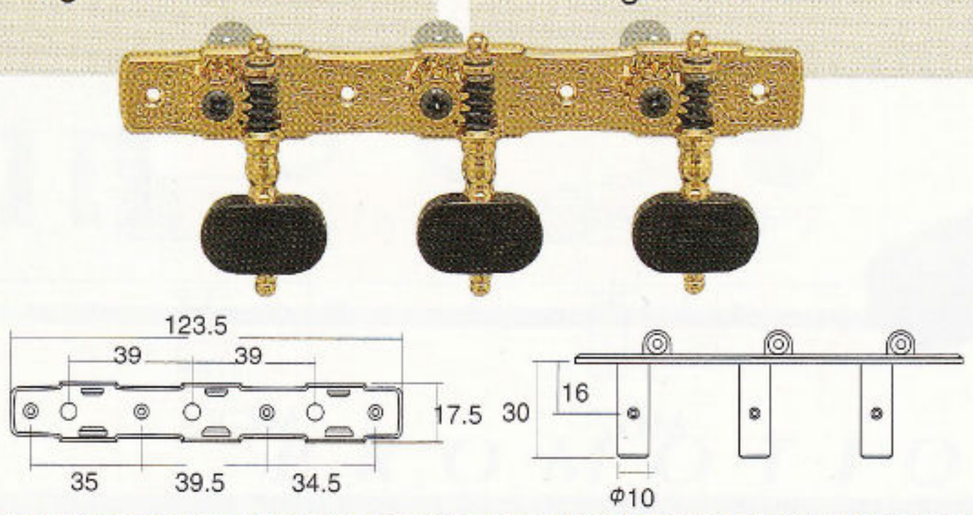

40A510P
e.g./40A510P-P

35G510P
e.g./35G510P-P

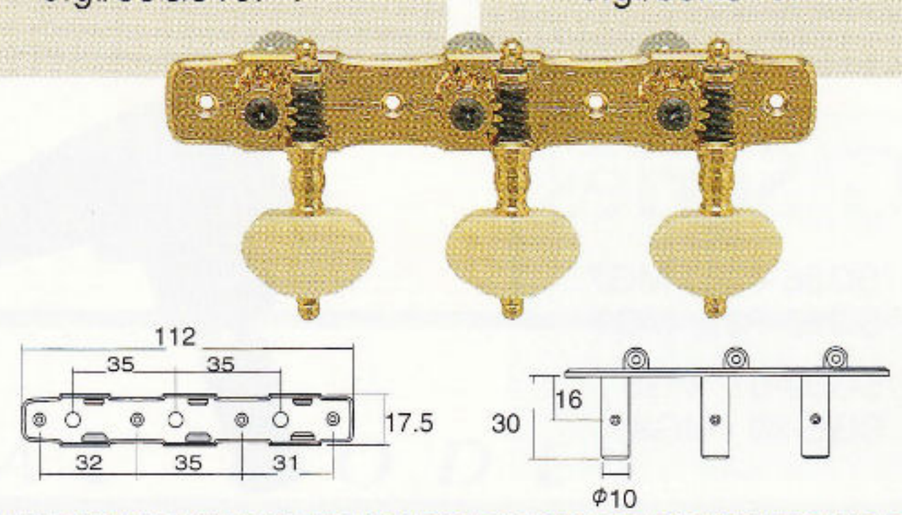

35A510P
e.g./35A510P-M

Plastic shaft mostly used for classic machine heads has short life and is easily cracked by stress of string for long time use. GOTOH 510 classic guitar machine heads, 40A510 and 35A510 introduce the special aluminum material that causes good sound, light weight, no headache for cracking and keeps long life. It can be colored in gold or black on order.

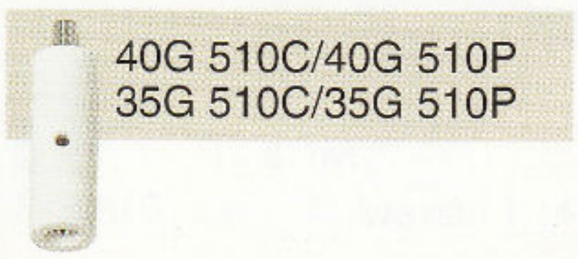

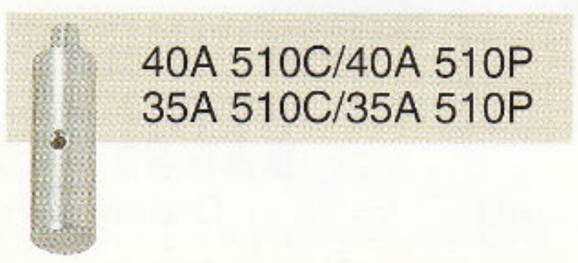

BUTTON OPTION
(510 Series)

Choose the number of button from listed as follow when machine heads is ordered.

Finishes : N-Nickel C-Chrome GG-Gold B-Black Chrome SB-Solid Brass

40G2000
e.g./40G2000-1W
Finish/GG

40P2000
e.g./40P2000-EN
Finish/GG

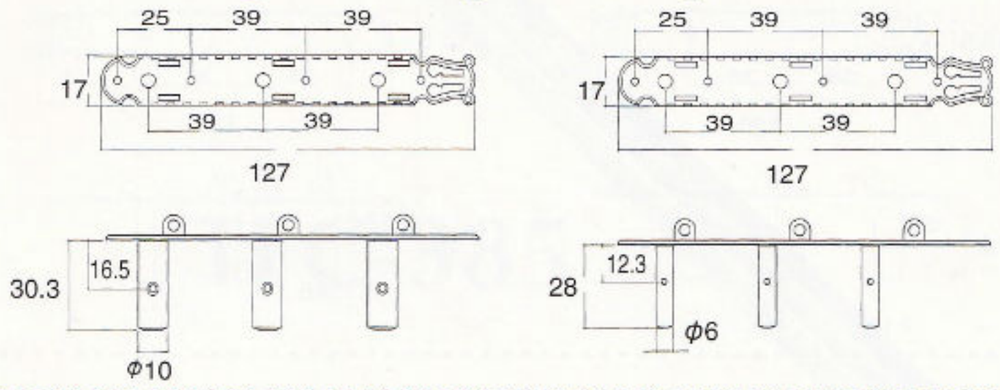

35G6500
e.g./35G6500-1R
Finish/SB

35P6500
e.g./35P6500-1M
Finish/SB

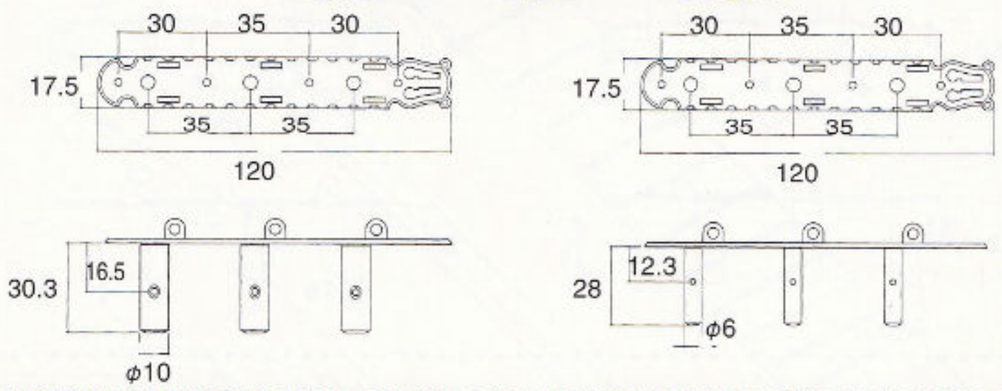

35G3500
e.g./35G3500-2R
Finish/SB

35P3500
e.g./35P3500-EI
Finish/SB

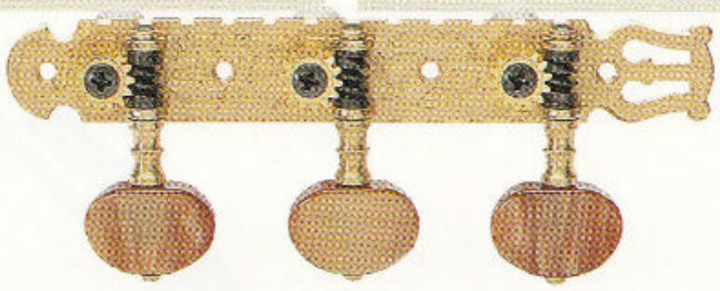

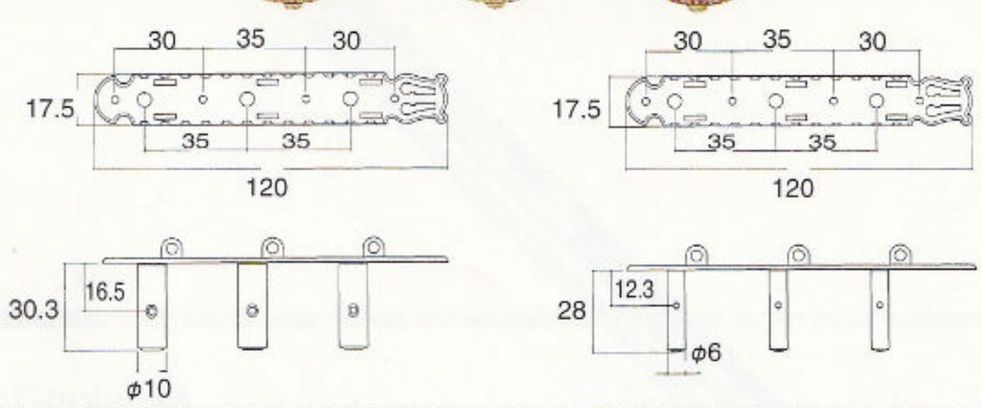

35G1800
e.g./35G1800-2M
Finish/SB

35P1800
e.g./35P1800-ER
Finish/SB

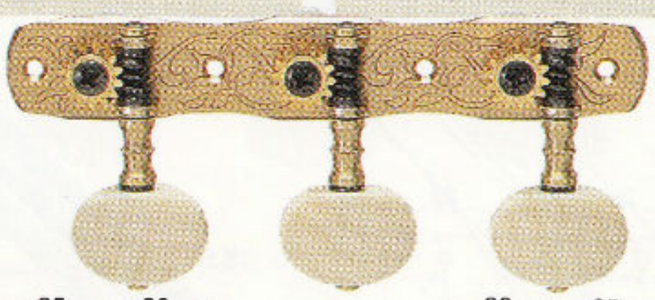

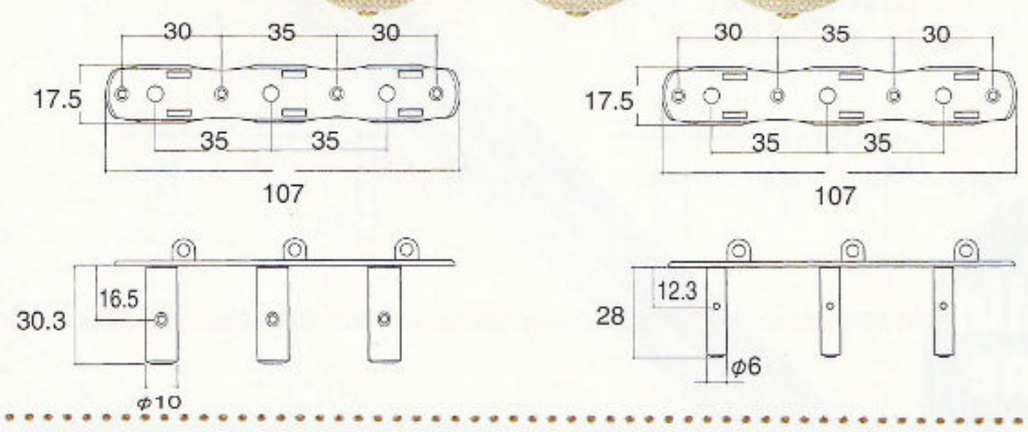

35G1600
e.g./35G1600-2W
Finish/GG

35P1600
e.g./35P1600-1W
Finish/GG

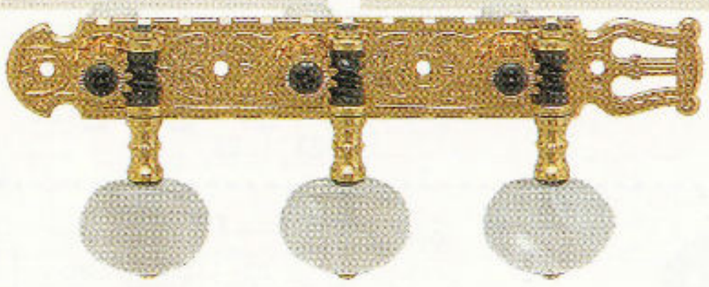

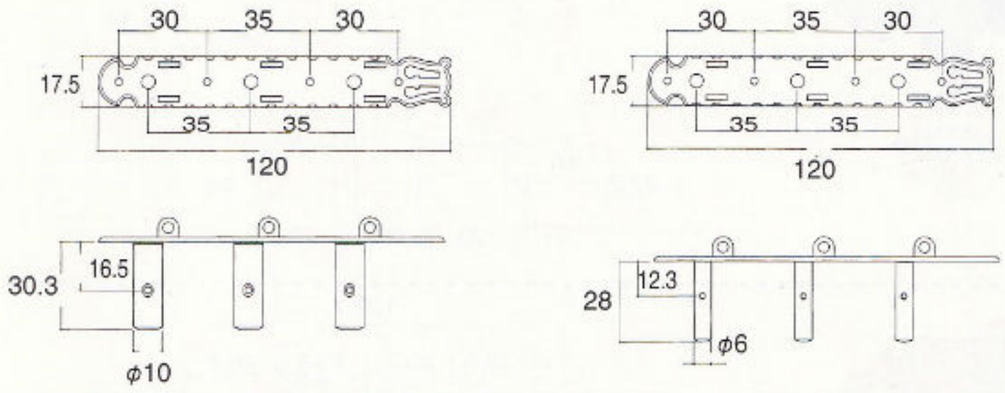

35G480
e.g./35G480-EW
Finish/GG

35P480
e.g./35P480-2R
Finish/GG

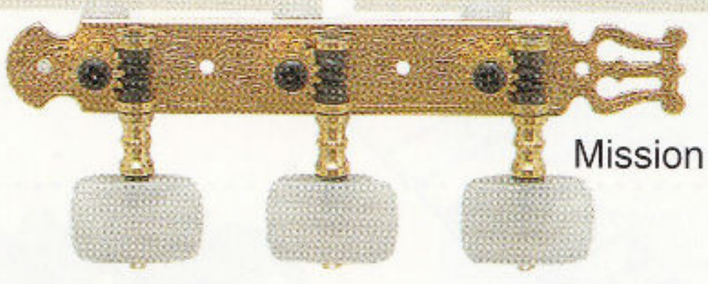

Mission 1:14

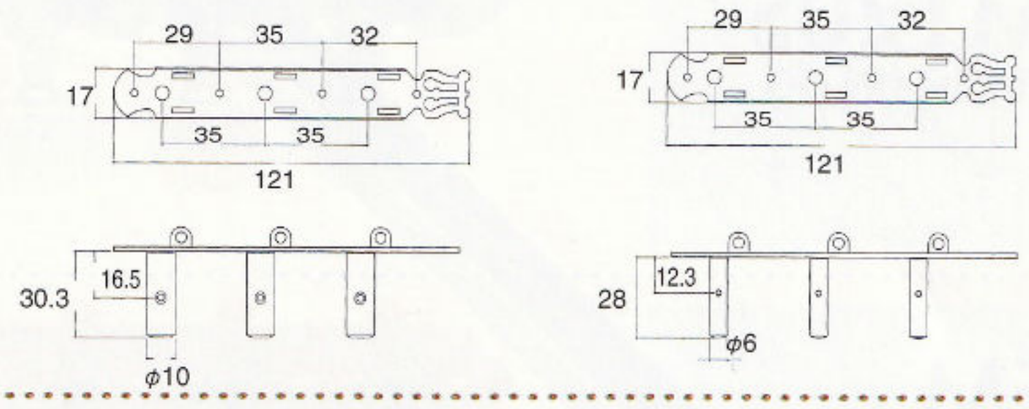

BUTTON OPTION

Choose the number of button from listed right when machine heads is ordered.

Classic Guitar Machine Heads

Mission 1:14

35G420
Finish /SG

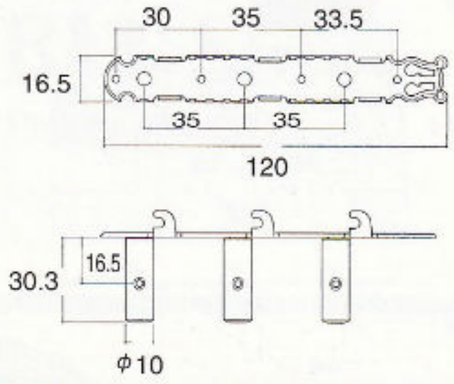

35P420
Finish /SG

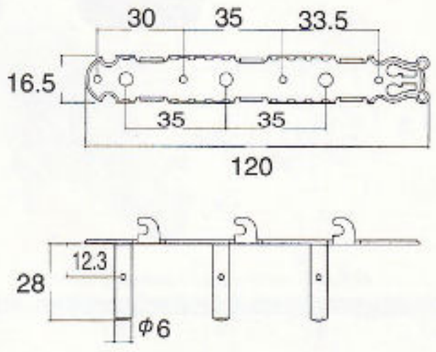

35G350
Finish /N

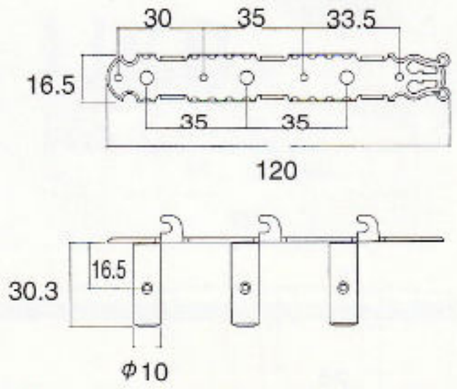

35P350
Finish /N

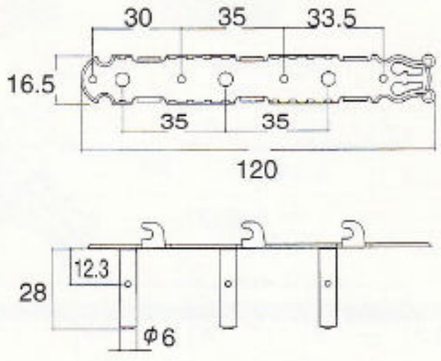

35G107
Finish /N

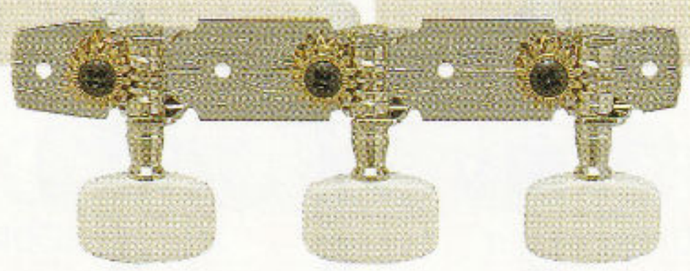

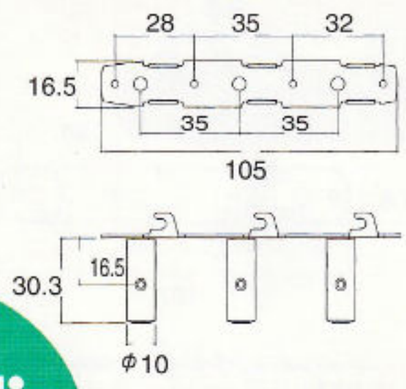

35P107
Finish /N

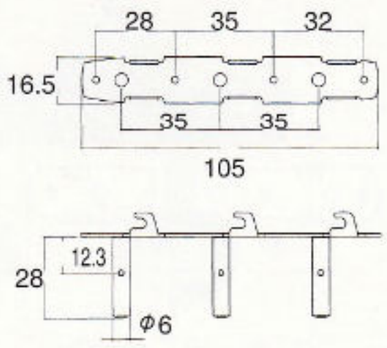

Mandolin Machine Heads

Mission 1:14

M120
Finishes/N.GG

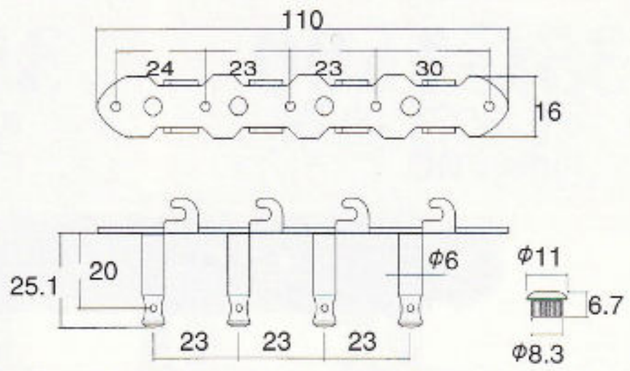

M120S
Finishes/N.GG

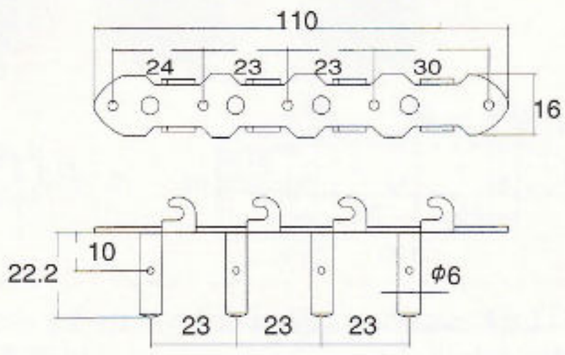

FM
Finishes/N.GG

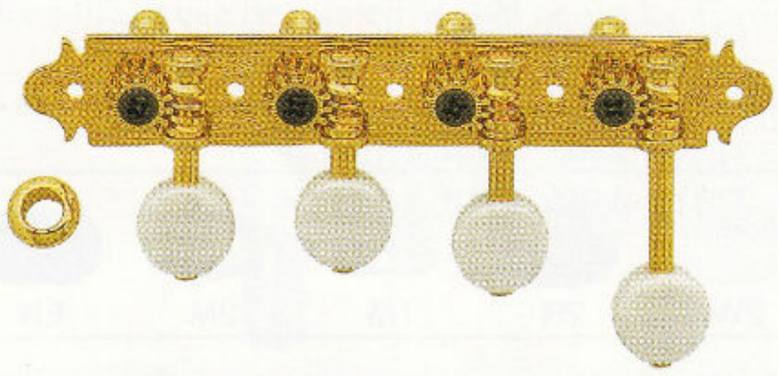

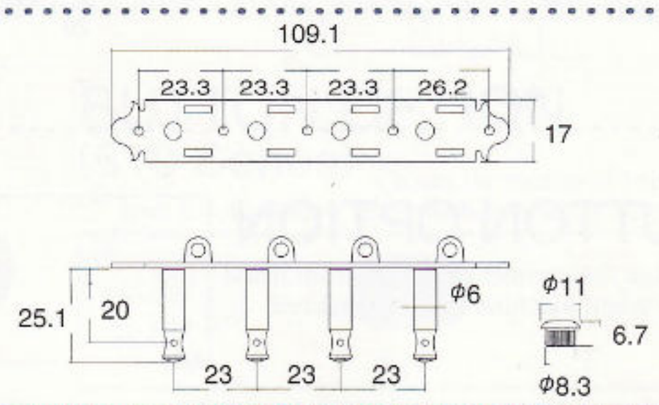

Finishes : N-Nickel C-Chrome GG-Gold B-Black Chrome SG-Semi Gold

Two-Way TRUSS ROD

Gotoh TFC two way truss rod is a most significant advance in the neck adjustments for acoustic guitars. Generally truss rods are used to correct the forward bow of a neck due to string tension and / or environment. Today with many light gauge strings tension is not quite so strong Gotoh TFC truss rod will also adjust neck in opposite direction creating a forward bow thereby achieving perfect fingerboard relief / action.

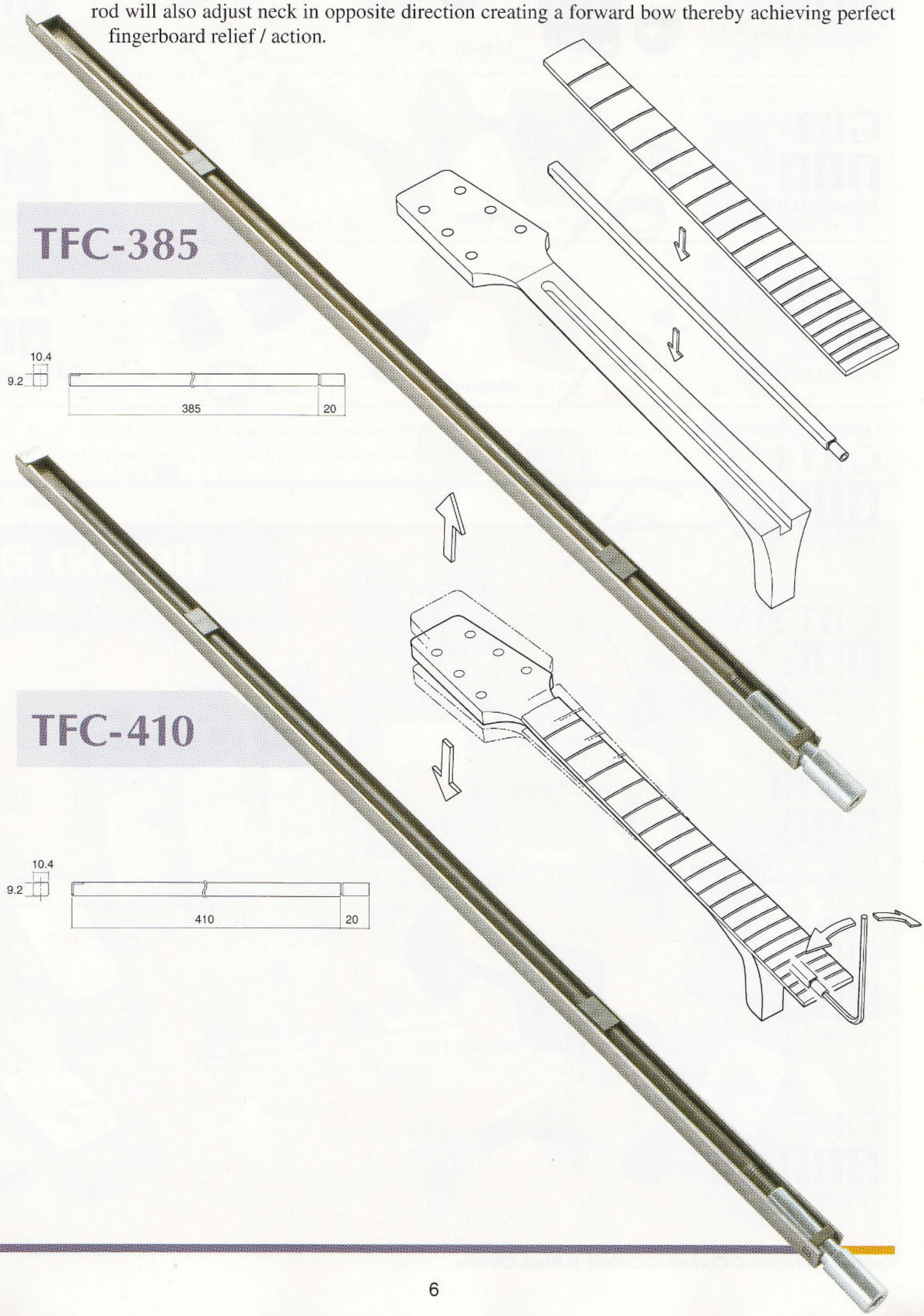

Bass Machine Heads

GB1

Finishes/N.GG.B

Mission 1:21

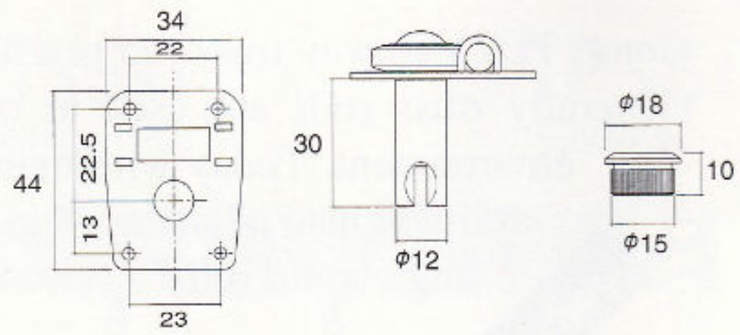

GB2

Finishes/N.GG.B

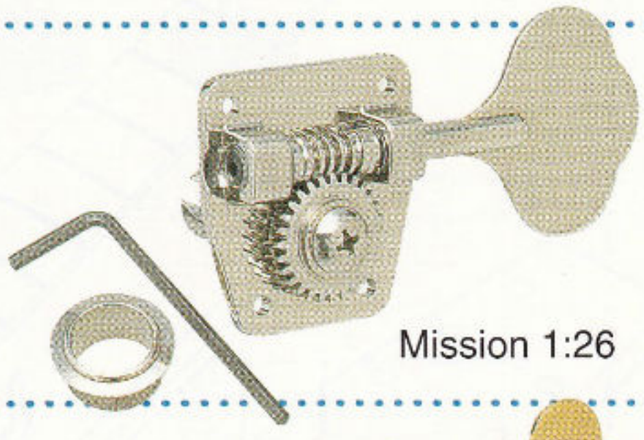

Mission 1:26

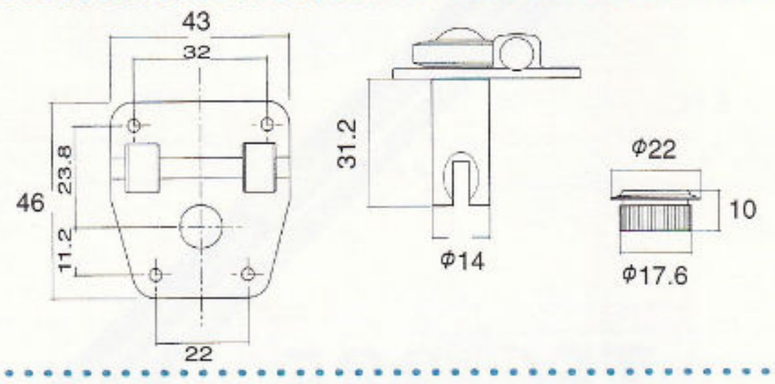

GB9L

Finishes/N.GG.B

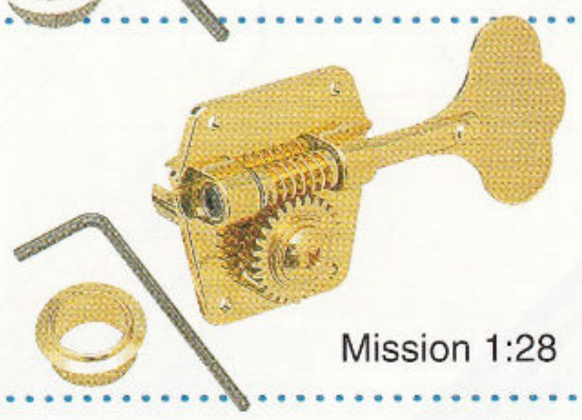

Mission 1:28

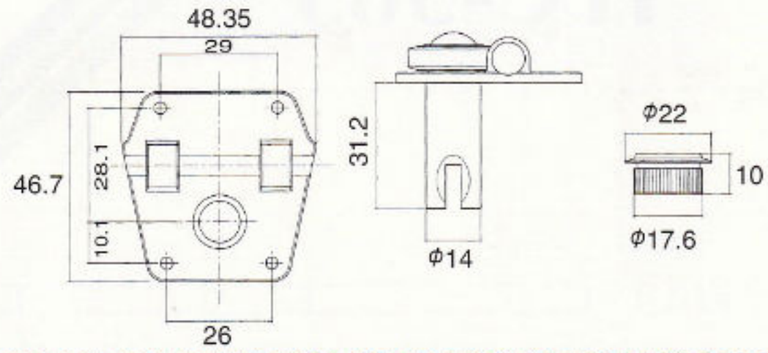

GB11

Finishes/C.GG.B

Mission 1:20

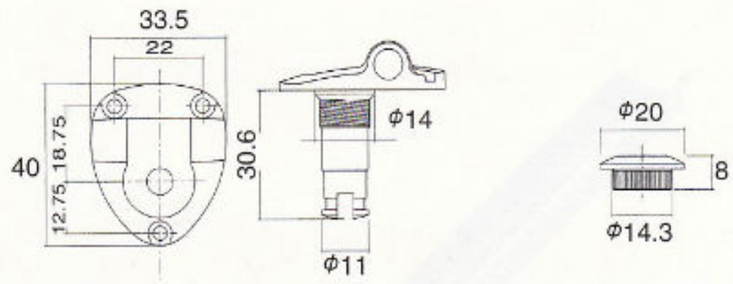

GB11W

Finishes/C.GG.B
Aluminum shaft

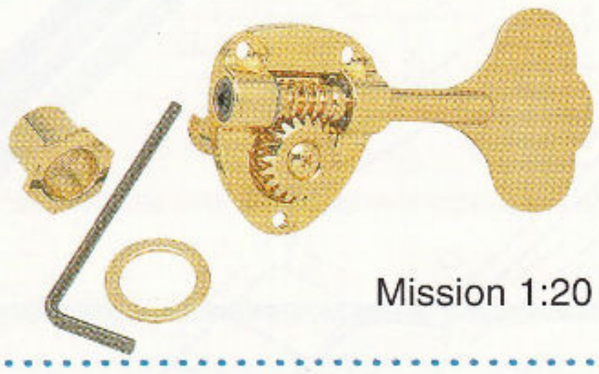

Mission 1:20

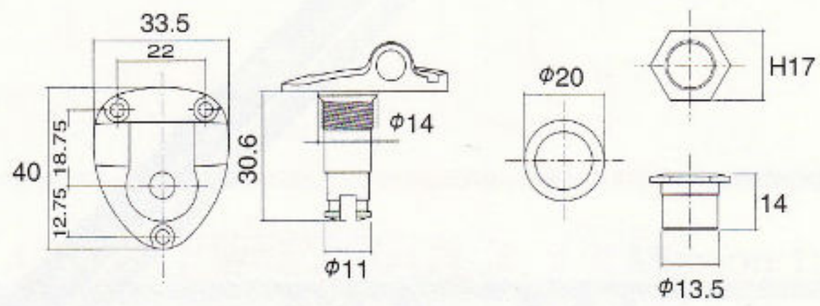

GB30

Finishes/N.GG.B
Aluminum shaft

Mission 1:26

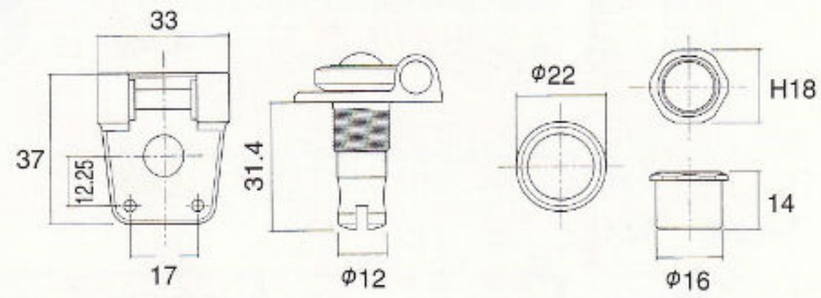

FB3

Finishes/N.GG.B

Mission 1:20

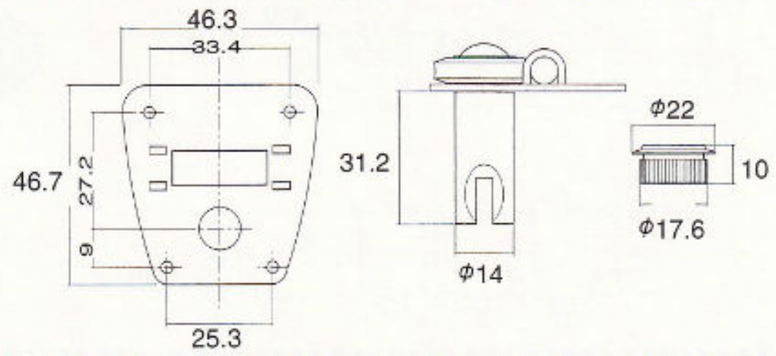

GBE

Finishes/C.B

Mission 1:20

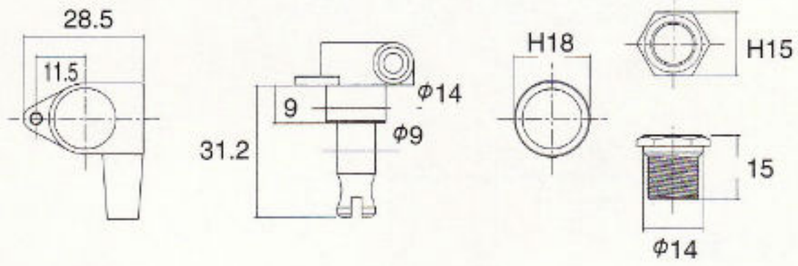

Finishes : N-Nickel C-Chrome GG-Gold B-Black Chrome

GB72

Finishes/C.GG.B
Aluminum shaft

Mission 1:20

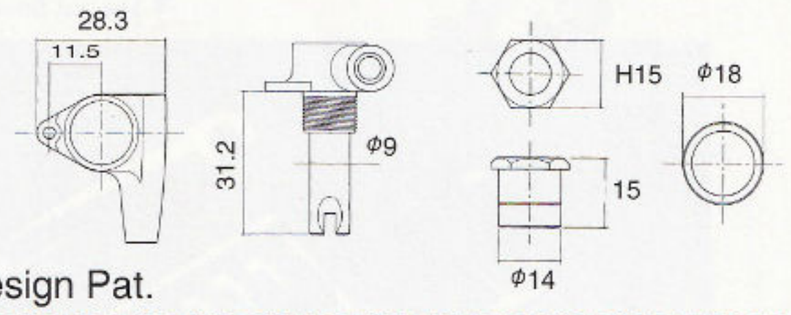

World Design Pat.

GB73

Finishes/C.GG.B
Aluminum shaft

Mission 1:20

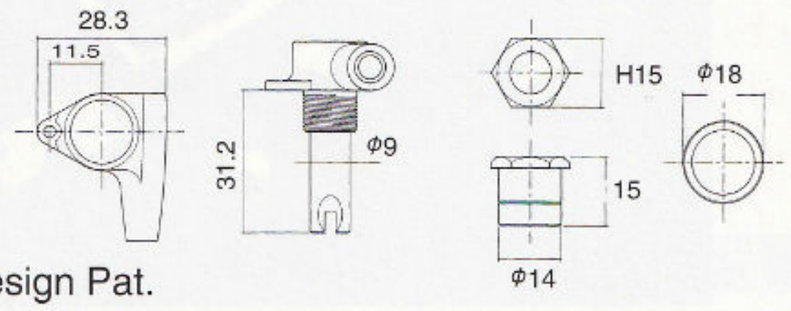

World Design Pat.

GB70

Finishes/C.GG.B

Mission 1:20

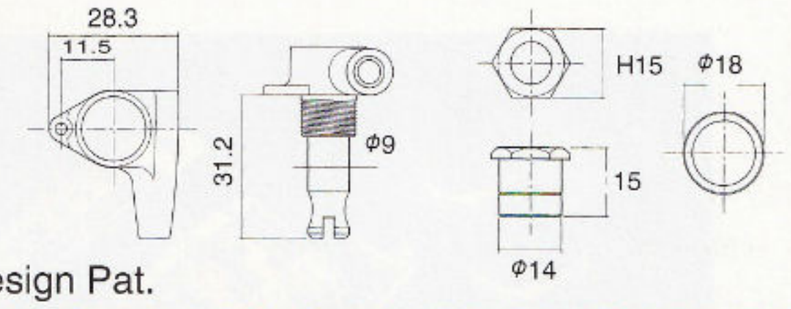

World Design Pat.

GB72/73 : As the weight is 20g lighter in comparison to GB70 per piece, it improves tone and helps bassist to lighten his burden especially when used for 5, 6 or more string basses that have heavier headstock with stuffy tone quality.

GOTOH® Display Packages

GOTOH ORIGINAL PLATING COLORS

"State of the art" high tech plating and finishing facility allows "Gotoh" to offer many unique color/finish combinations.

* Special finishes not available on some products. * Special finishes may require minimun production quantity.

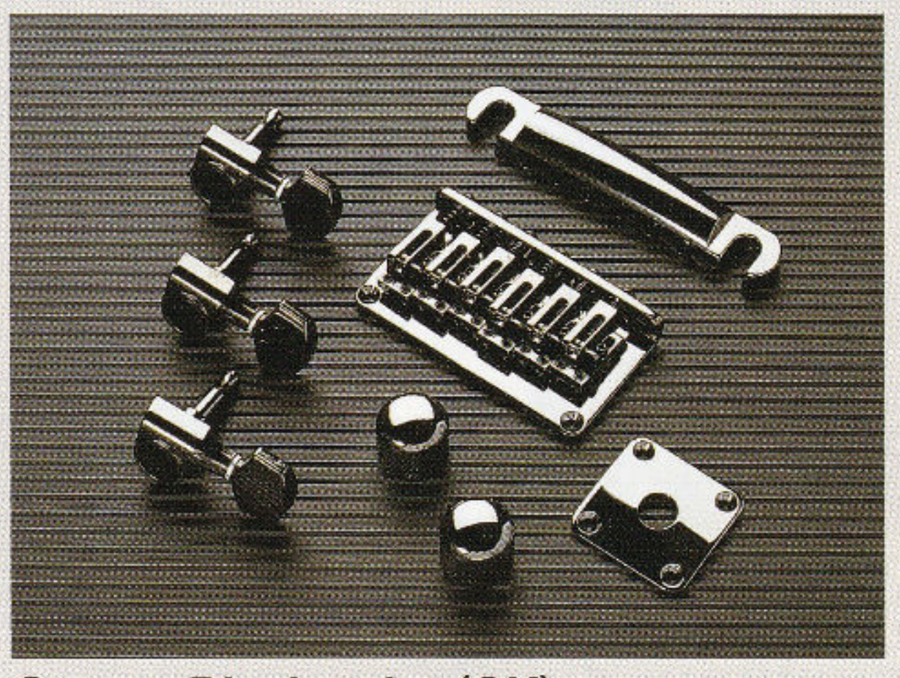

Cosmo Black color (CK)

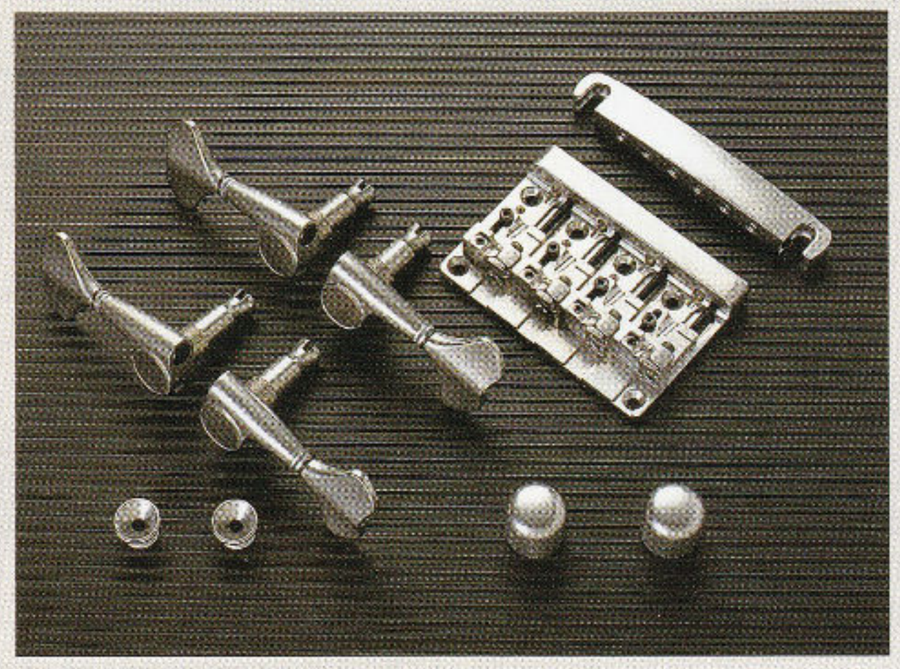

Cosmo White color (CW)

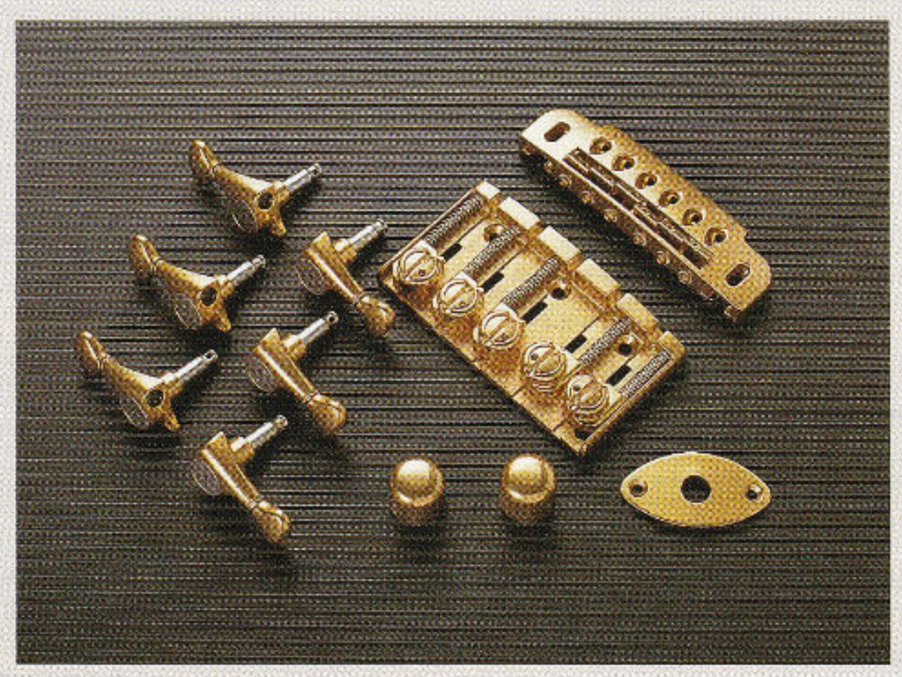

Pearl Gold color (PG)

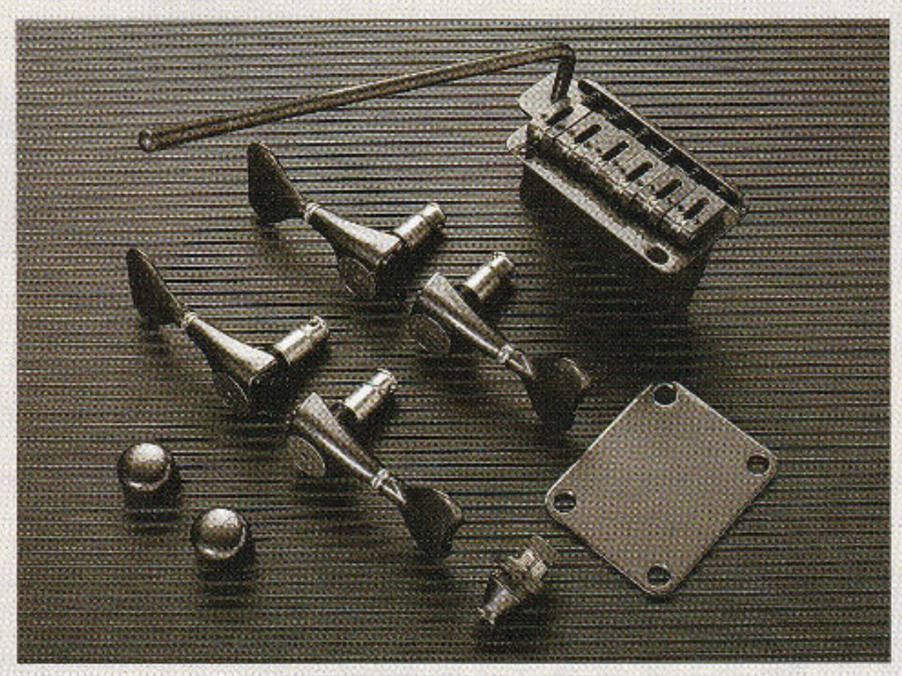

Pearl Black color (PB)

VS100G Color HC/HG/HB

SG36 and SG38 are available in special satin (honed) finishes to match VS100G vibrato bridges, etc..

SG36-01/20/07/05

SG38-01/20/07/05

Wilkinson · G GOTOH® Licenced Product Series

VS100G Finishes/HC,HG,HB

String pitch 10.8mm

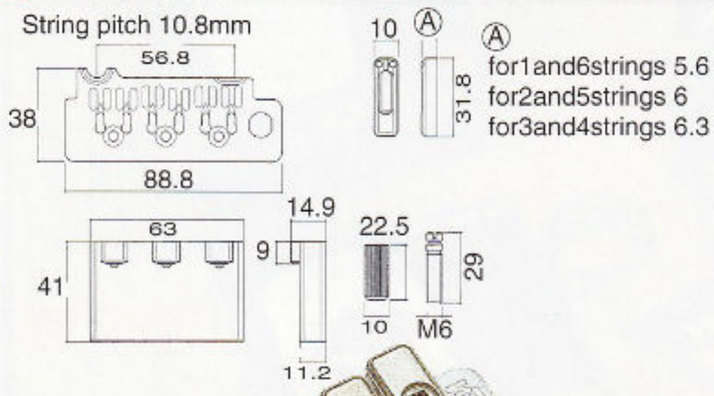

VSVG Finishes/N,GG,B

String pitch 10.8mm,Steel Block

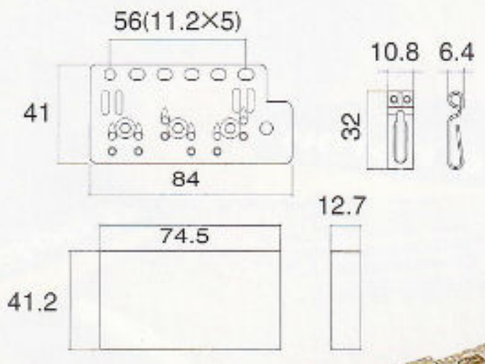

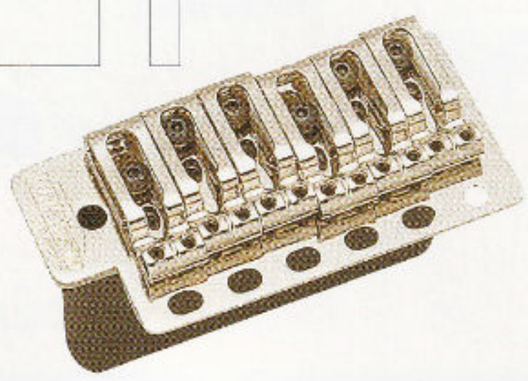

VSVE Finishes/N,GG,B

String pitch 10.8mm

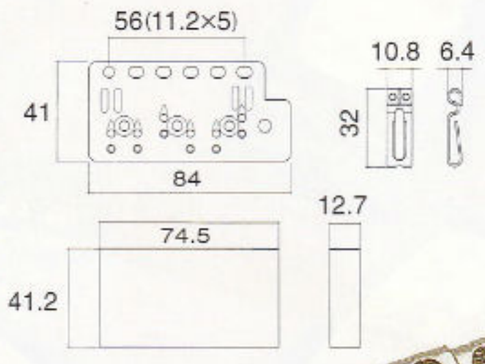

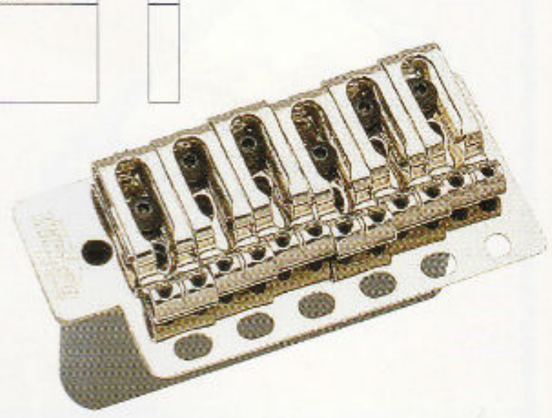

Finishes : N-Nickel C-Chrome GG-Gold B-Black Chrome HC-Honed Chrome HG-Honed Gold HB-Honed Black

GB100

Finishes/N.C.GG.B

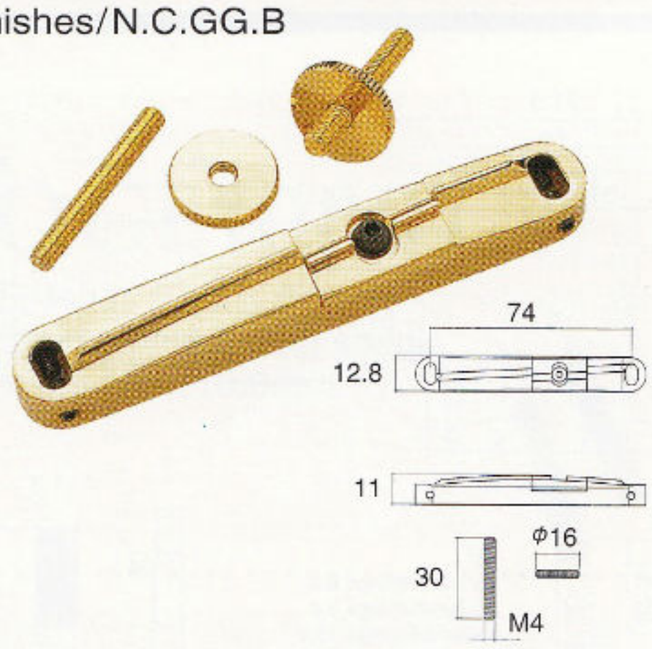

GTB100

Finishes/N.C.GG.B

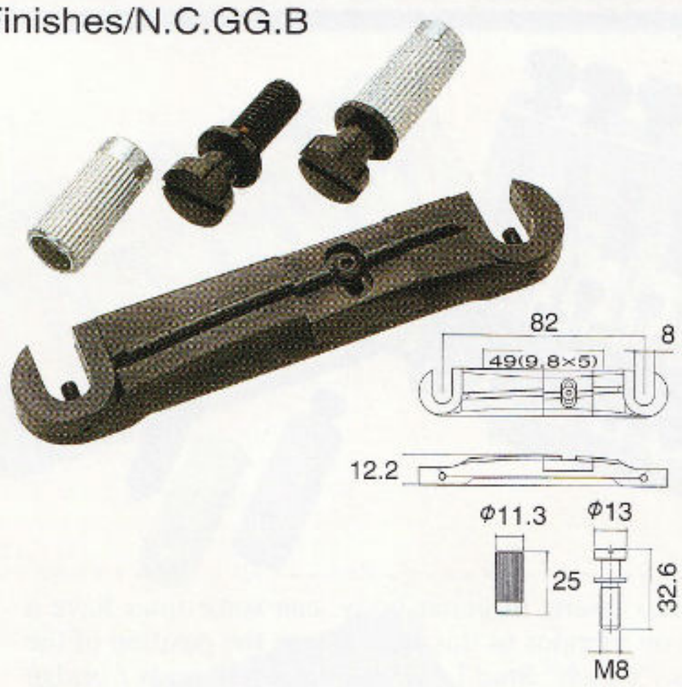

GTB200

Finishes/N.C.GG.B

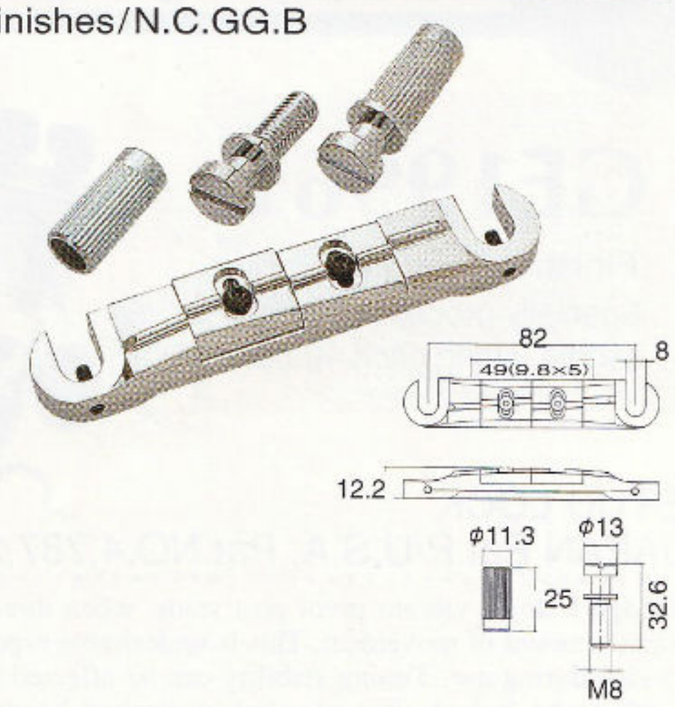

WBB

Finishes/C.GG.B

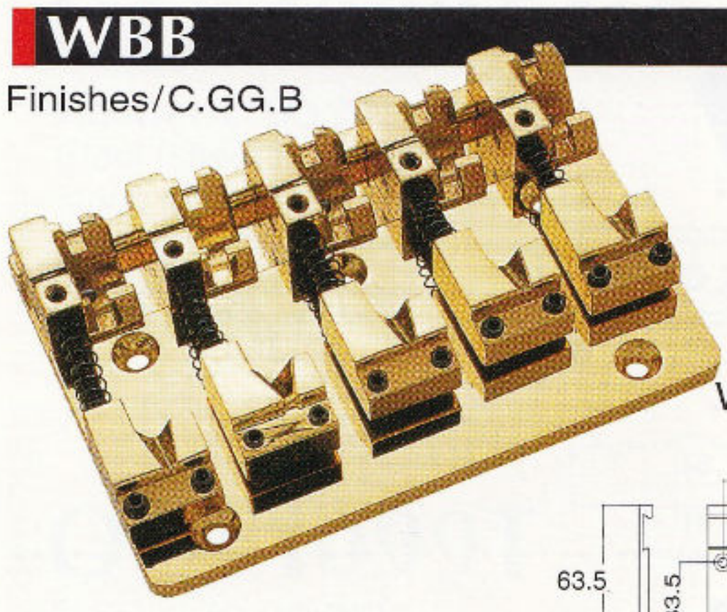

WBB-4(4-strings)

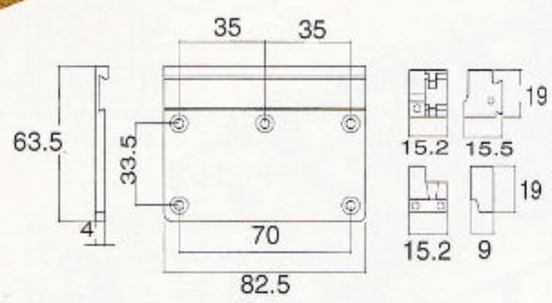

String pitch 15.2~21mm

WBB-5(5-strings)

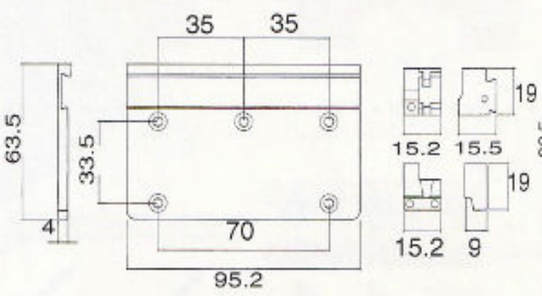

String pitch 15.2~19mm

WBB-6(6-strings)

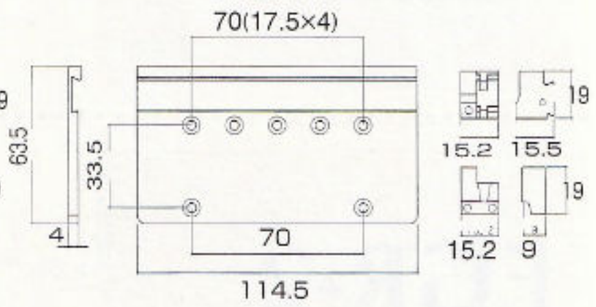

String pitch 15.2~19mm

WBBO

Finishes/C.GG.B

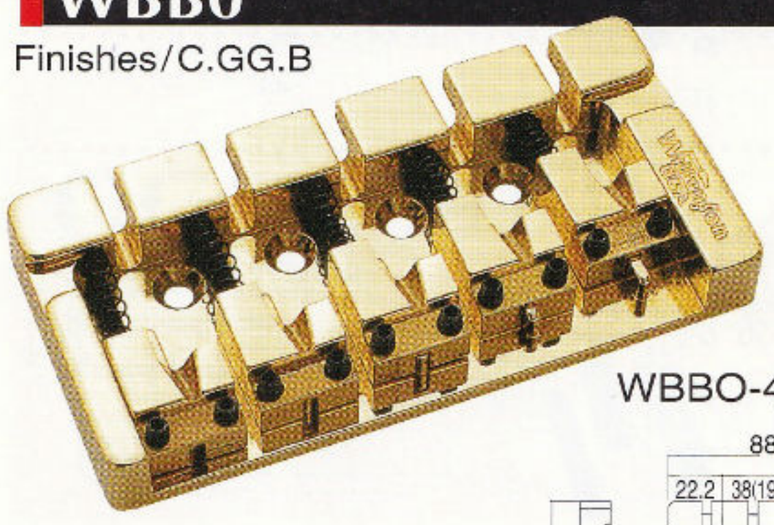

WBBO-4(4-strings)

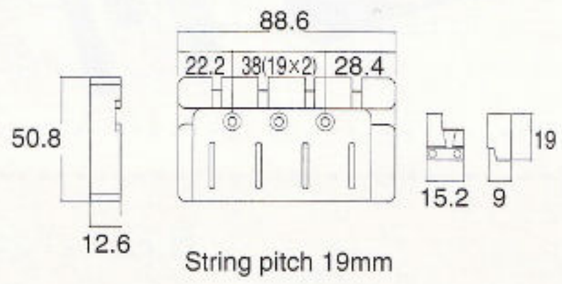

String pitch 19mm

WBBO-5(5-strings)

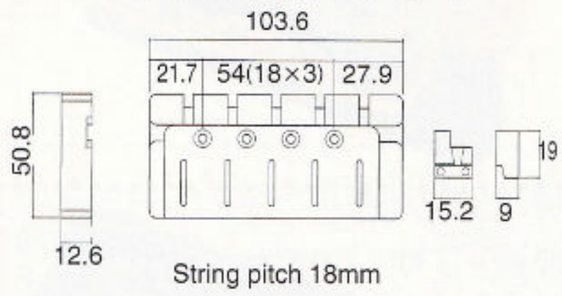

String pitch 18mm

WBBO-6(6-strings)

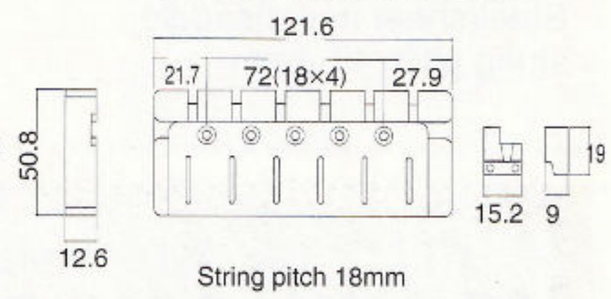

String pitch 18mm

WBG

Finishes/C.GG.B

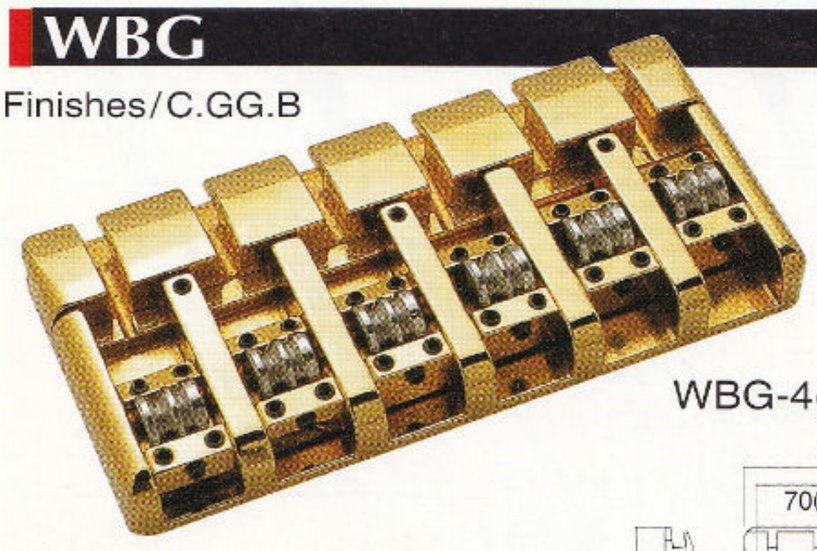

WBG-4(4-strings)

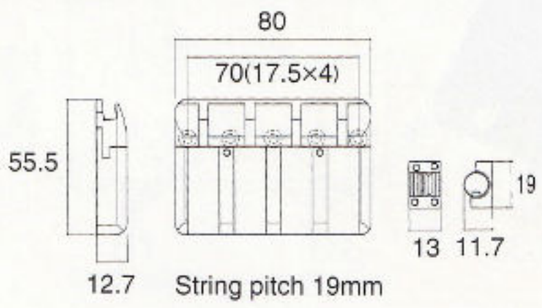

String pitch 19mm

WBG-5(5-strings)

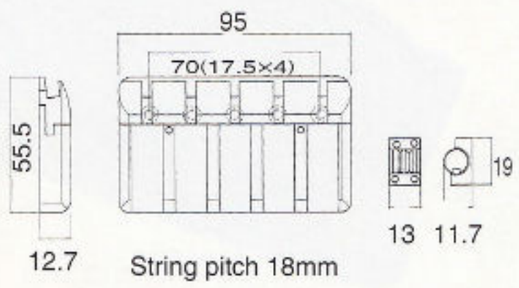

String pitch 18mm

WBG-6(6-strings)

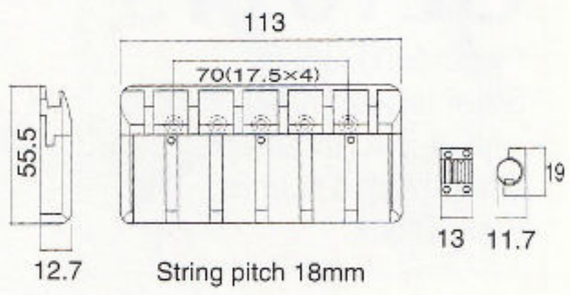

String pitch 18mm

Arm,Springs,Spring holder and Wrench included.

GE1996T

Finishes/C.GG.B
Specially processed steel saddle, string pitch 10.8mm

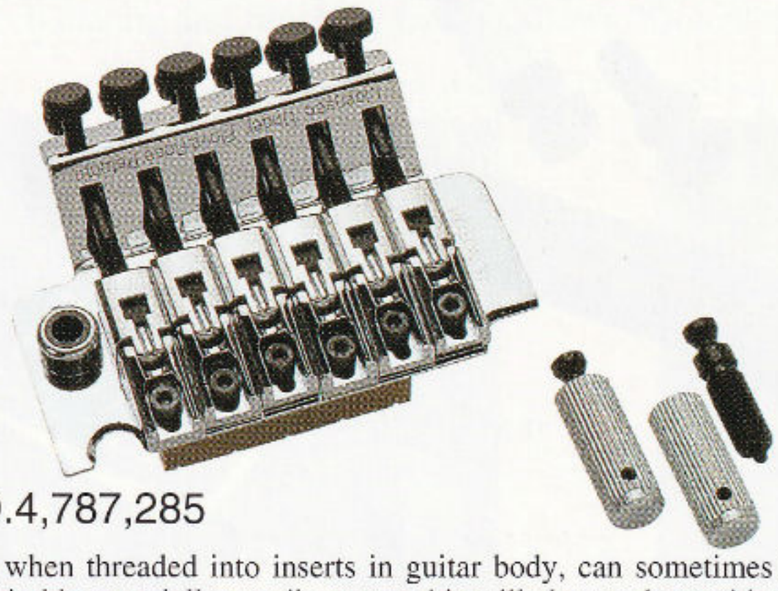

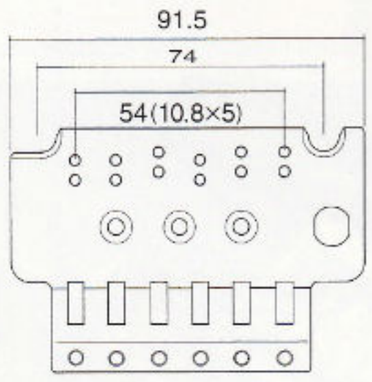

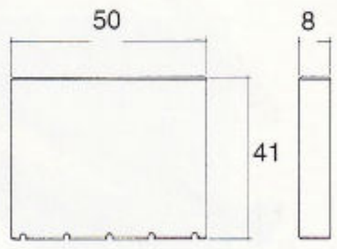

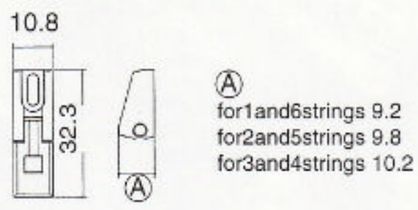

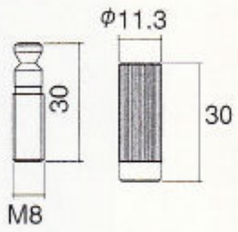

STUD LOCK
JAPAN Pat.P/U.S.A. Pat.NO.4,787,285

Bridge fixing / vibrato pivot post studs, when threaded into inserts in guitar body, can sometimes have a small amount of movement. This is undesirable especially on vibratos as this will change the position of the bridge during use. Tuning stability can be affected by this. "Gotoh" Stud Lock enables pivot posts / bridge studs to be locked after adjusting to desired height thereby increasing tuning stability and enhancing all string vibrations to be transfered to instrument body for superior sound.

*This system is available on GE1996T / VS100G / 510LA / 510LB / 510CB.

FGR-1 GHL-1

Finishes/C.GG.B

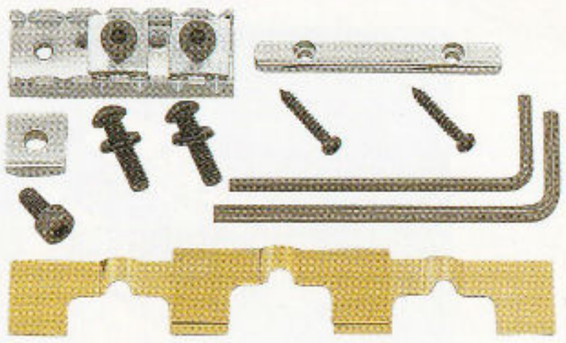

FGR-1

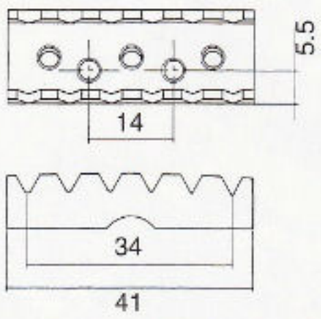

GHL-1

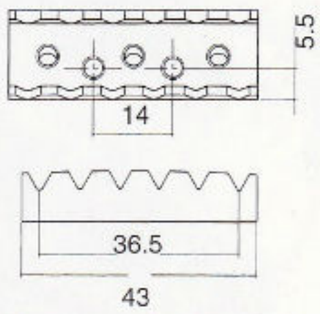

FGR-2 GHL-2

Finishes/C.GG.B

FGR-2

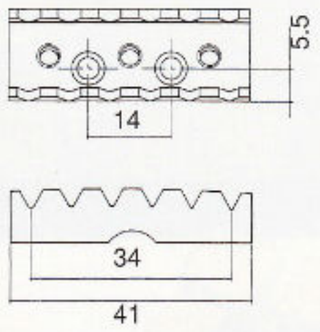

GHL-2

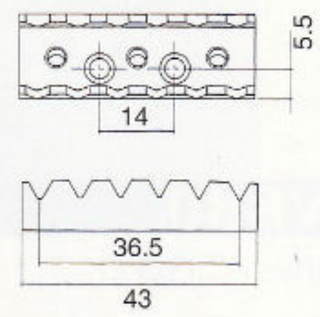

GE101T

Finishes/C.GG.B
Steel(sheet metal)saddle, string pitch 11.3mm

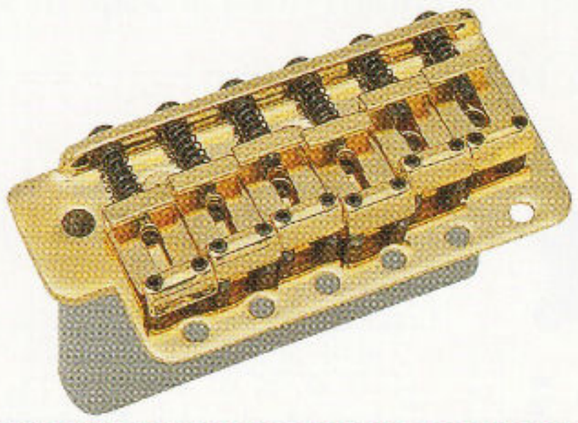

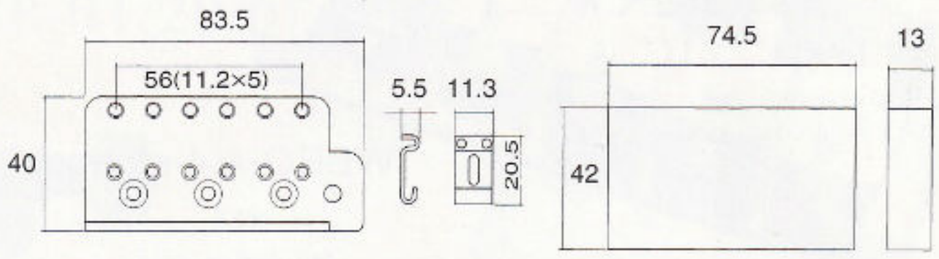

GE102T

Finishes/C.GG.B
Steel saddle, string pitch 11.3mm

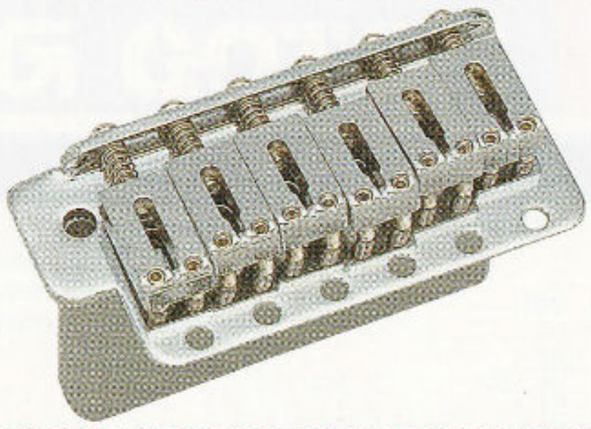

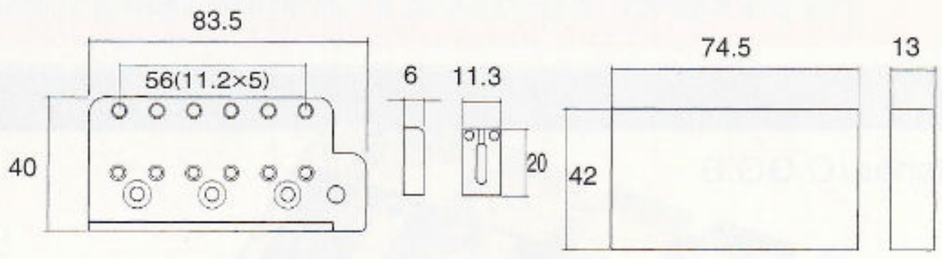

GE101TS

Finishes/C.GG.B
Steel (sheet metal) saddle with U.S.A. threads screws, string pitch 11.3mm
Steel Block

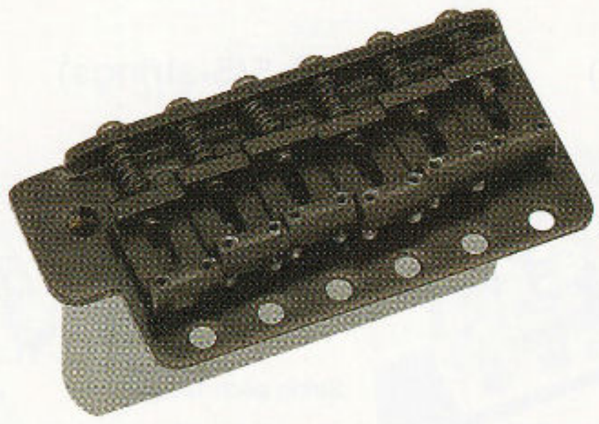

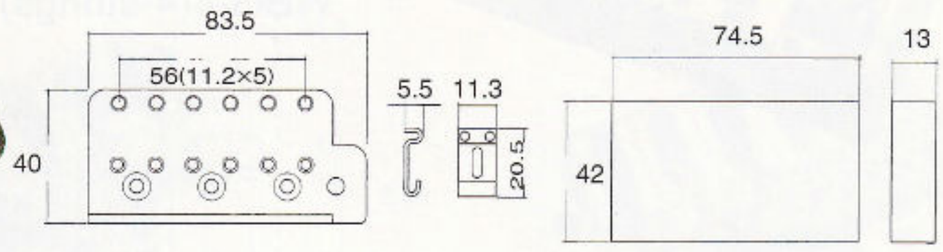

Finishes : N-Nickel C-Chrome GG-Gold B-Black Chrome

OGE1088T

Finishes /C.GG.B
Steel (sheet metal) saddle,
string pitch 10.8mm

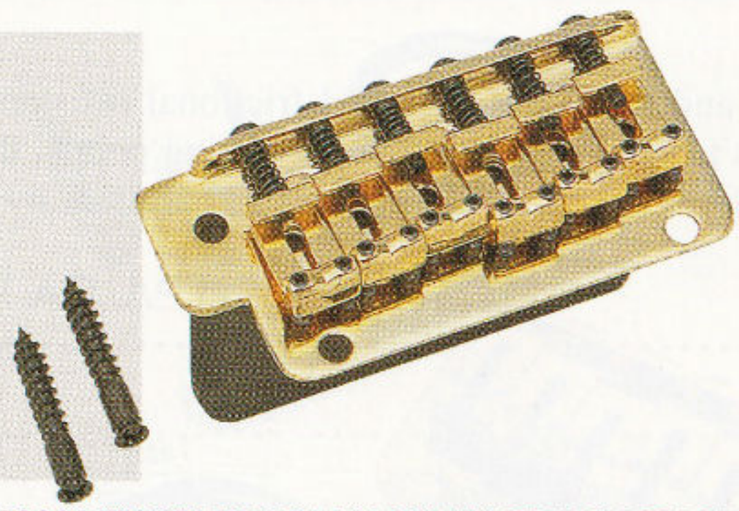

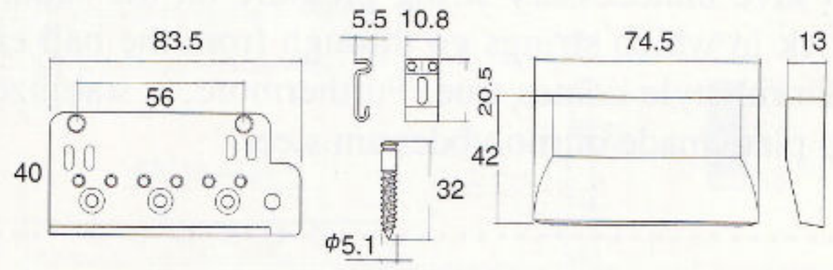

OGE1088T-W

Finishes /C.GG.B
Steel (sheet metal) saddle,
string pitch 10.8mm

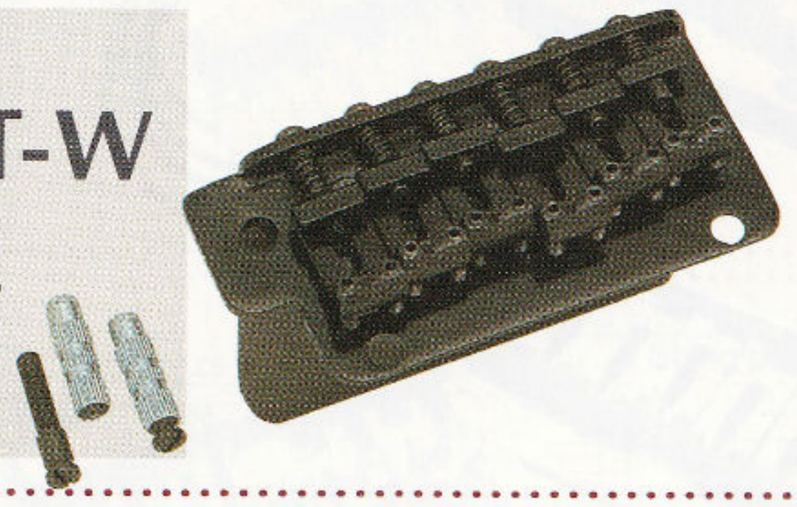

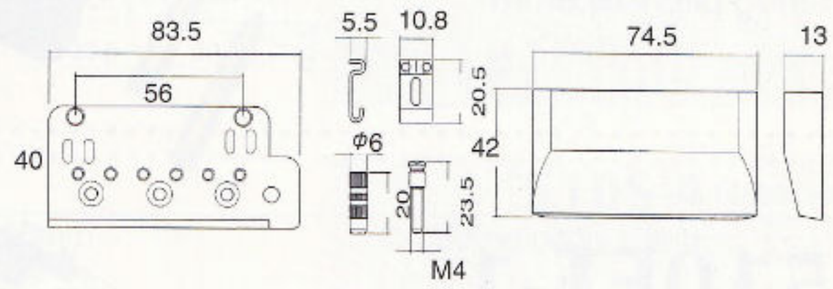

OGE1099T

Finishes /C.GG.B
Steel saddle,
string pitch 10.8mm

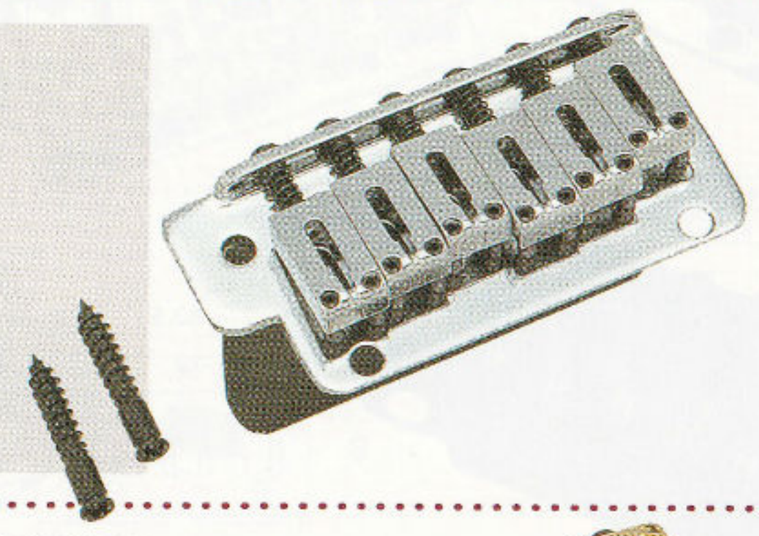

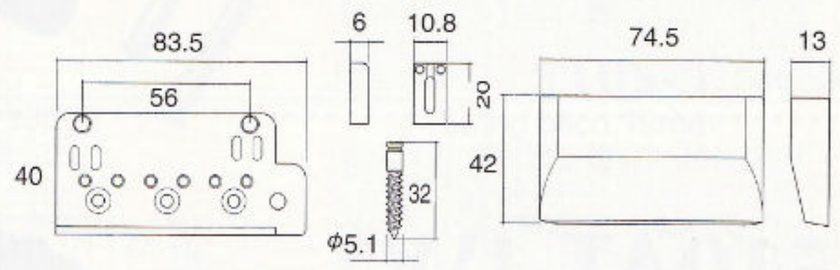

OGE1099T-W

Finishes /C.GG.B
Steel saddle,
string pitch 10.8mm

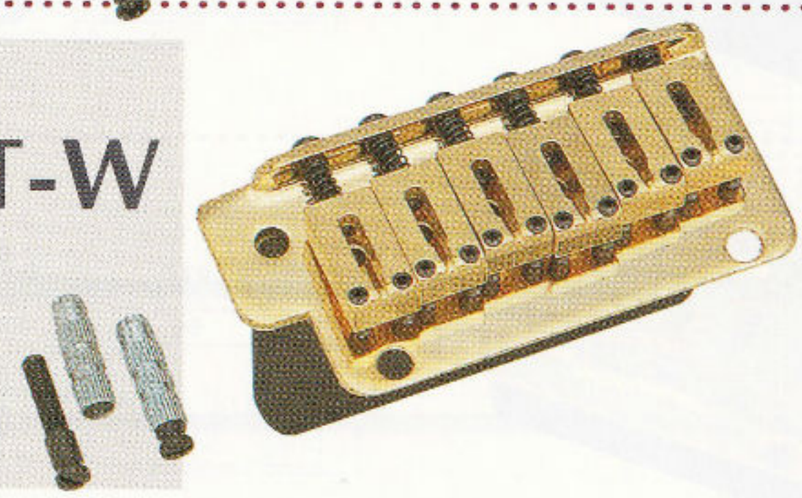

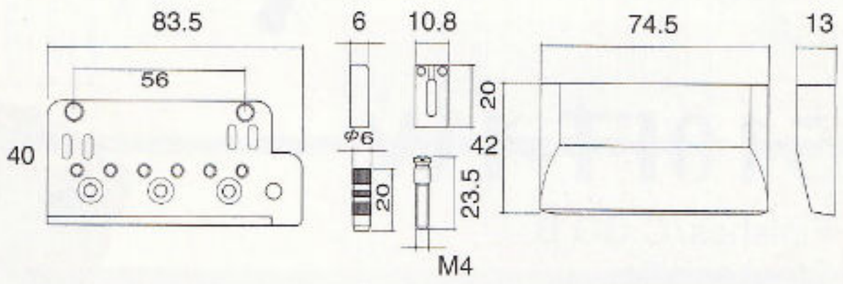

ARMS Finishes/C.GG.B

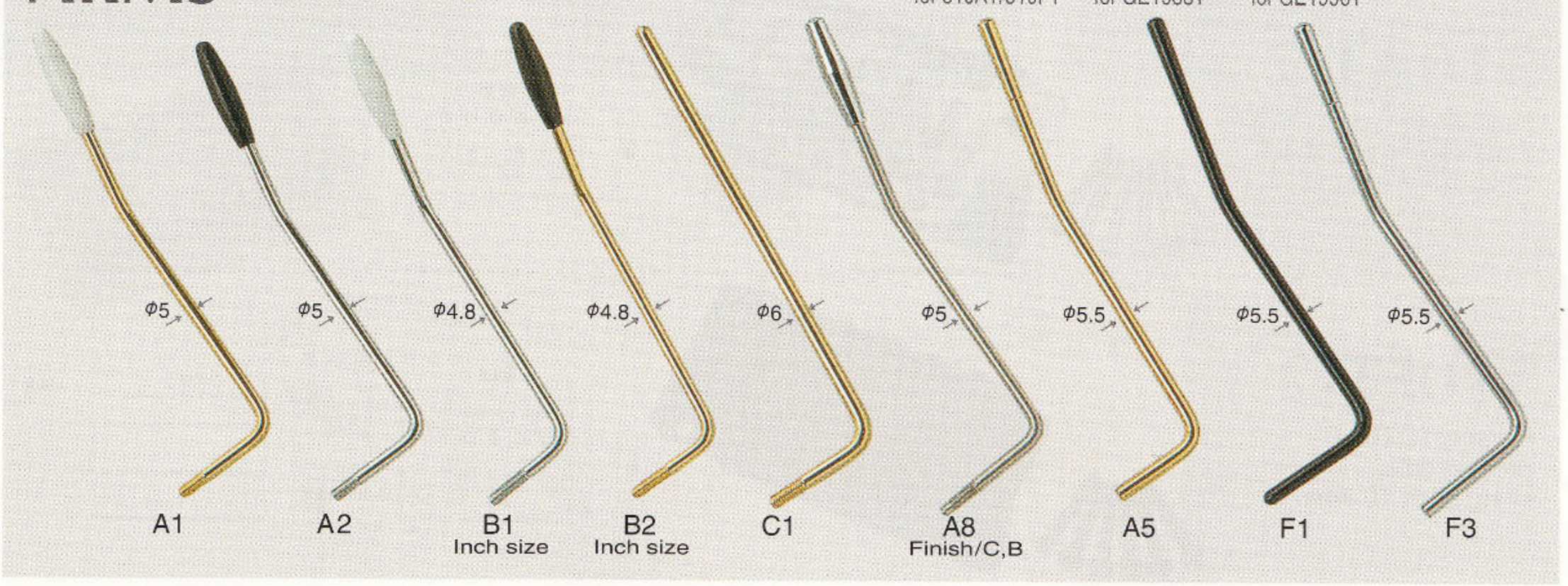

510 SERIES

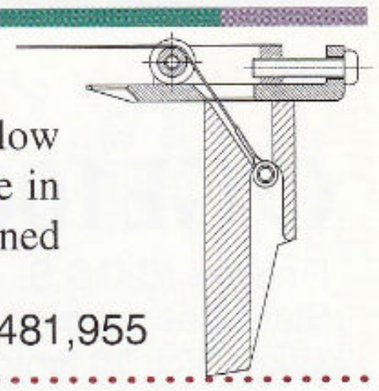

To save unnecessary string pressure on the saddles and to keep the limited frictional resistance by hollow block in which strings go through from the ball ends to saddles without any touching points, the ultimate in fulcrum style comes true. Furthermore, it stabilizes knife-edges and smoothest arm system by the hardened top plate made of molybdenum steel.

JAPAN Pat.P/U.S.A. Pat.No.5,481,955

510AT-1

Finishes/C.GG.B
Steel saddle with roller,
string pitch 10.8mm

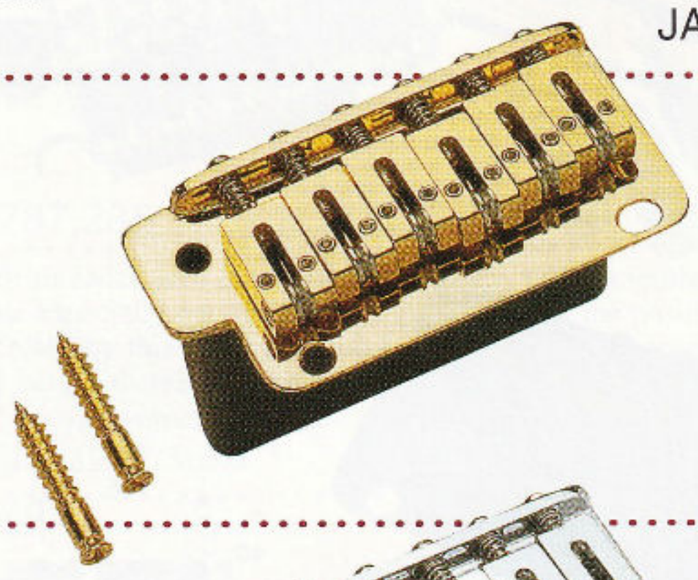

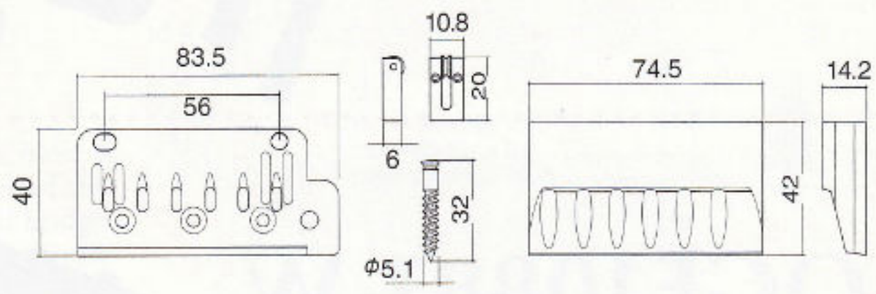

510FT-1

Finishes/C.GG.B
Steel saddle,
string pitch 10.8mm

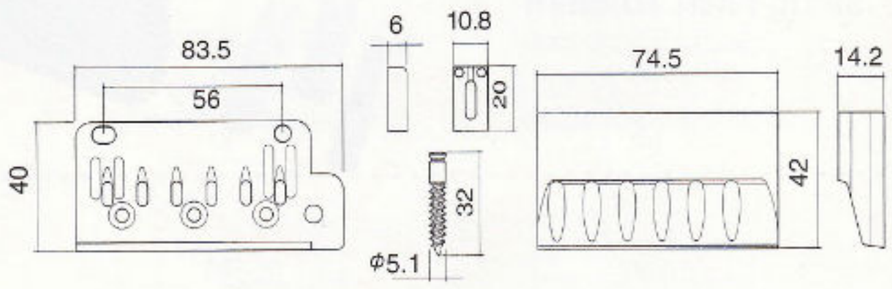

510AT-1W

Finishes/C.GG.B
Steel saddle with roller,
string pitch 10.8mm

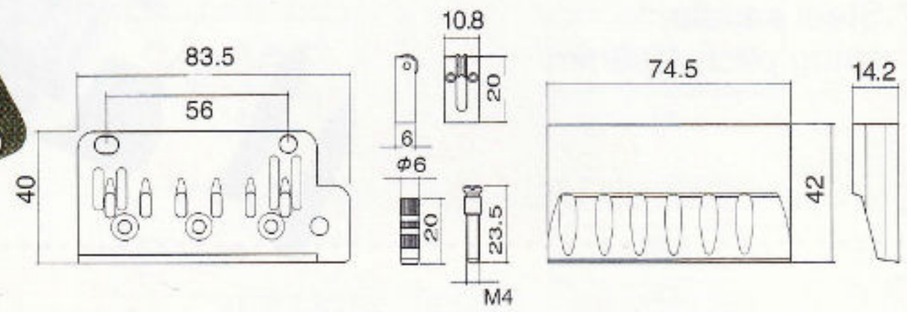

510FT-1W

Finishes/C.GG.B
Steel saddle,
string pitch 10.8mm

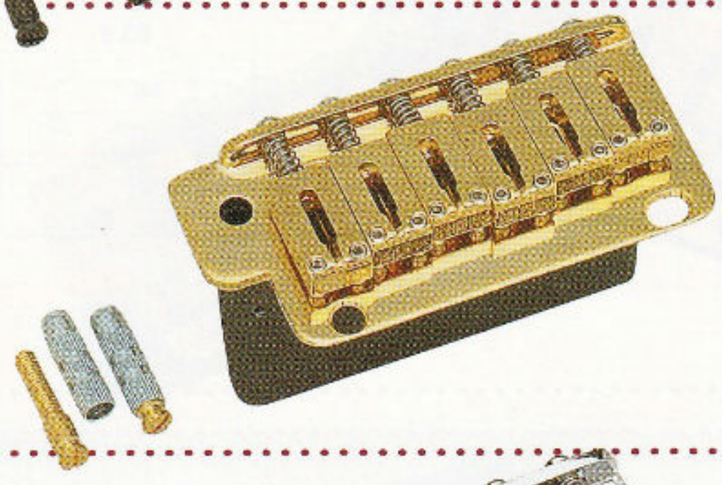

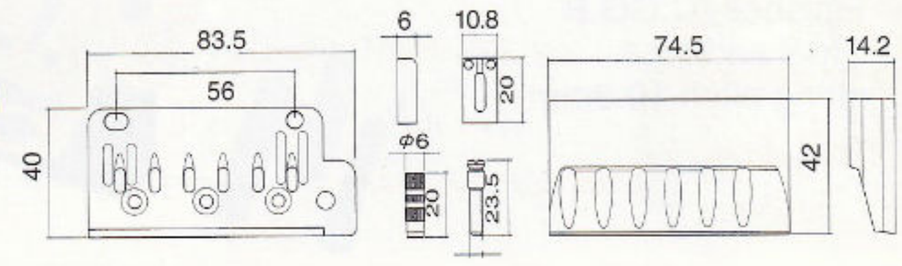

510AT-2

Finishes/C.GG.B
Steel saddle with roller,
string pitch 10.8mm

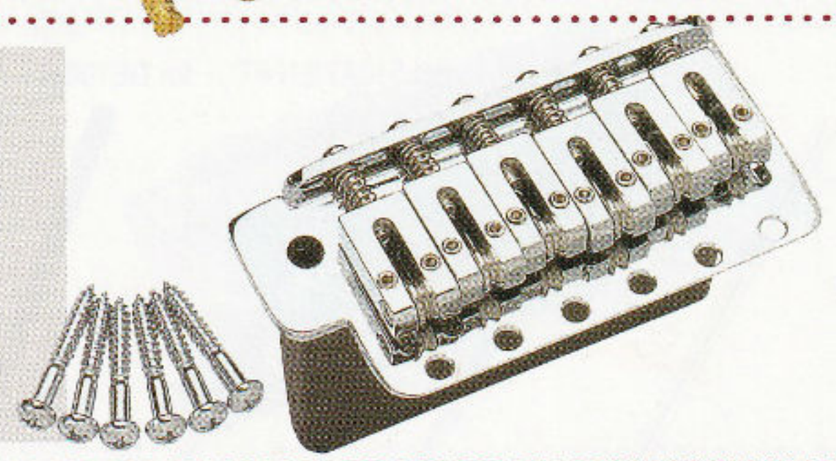

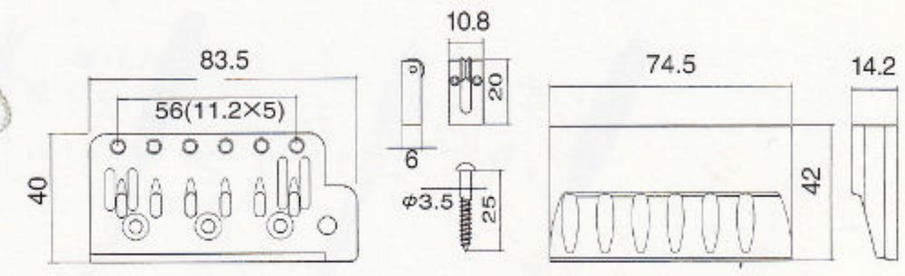

510FT-2

Finishes/C.GG.B
Steel saddle,
string pitch 10.8mm

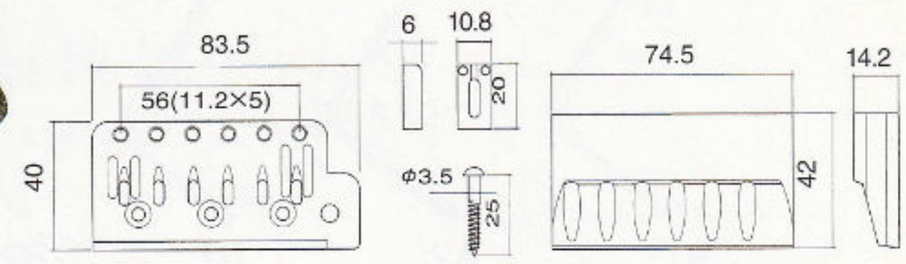

Finishes : N-Nickel C-Chrome GG-Gold B-Black Chrome

Piezo Bridges
Guitar & Bass

510 SERIES

510BZ

Finishes / N.C.GG.B
Brass saddle,
ARC pickup

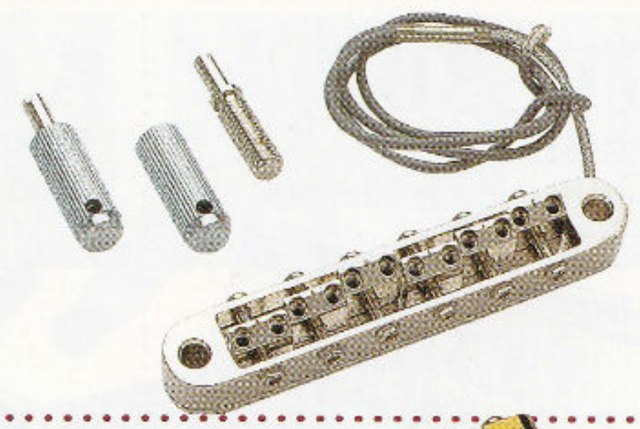

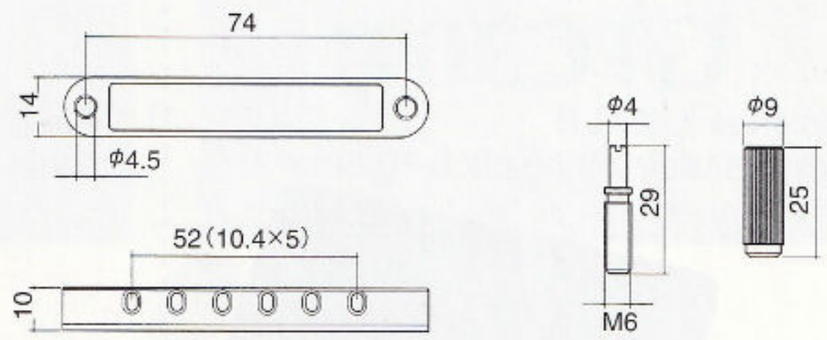

510TZ

Finishes / C.GG.B
Brass saddle,
String pich 10.8mm
ARC pickup

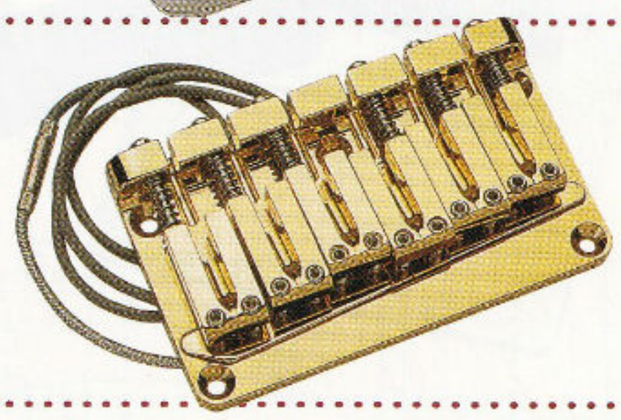

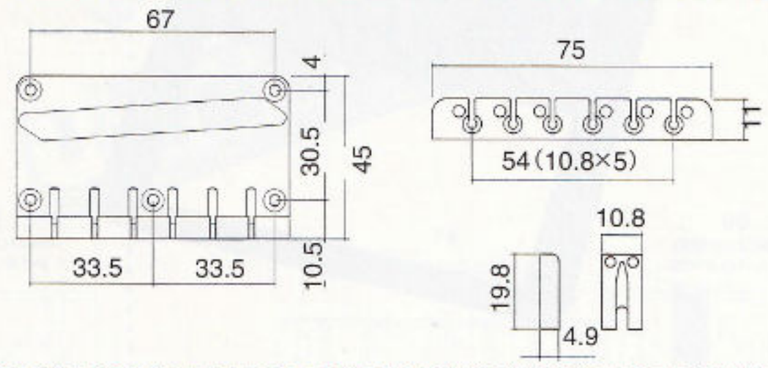

510S

Finishes / C.GG.B
Hard zinc saddle,

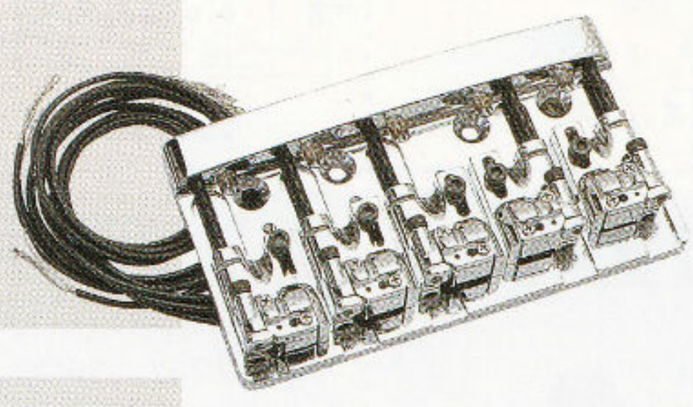

510S-4 (4-strings)

String pitch 18mm

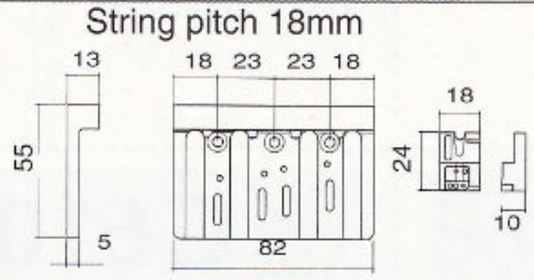

String pitch 19mm

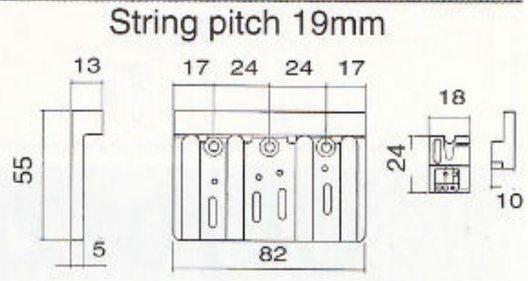

510S-5 (5-strings)

String pitch 18mm

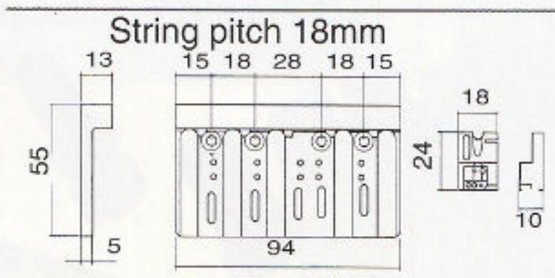

String pitch 19mm

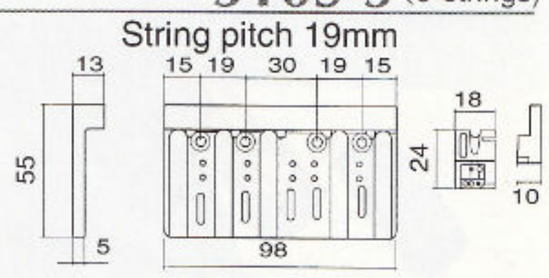

510S-6 (6-strings)

String pitch 17mm

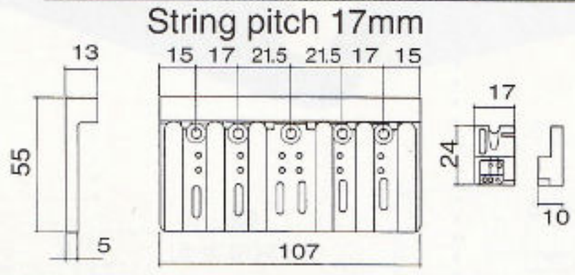

String pitch 18mm

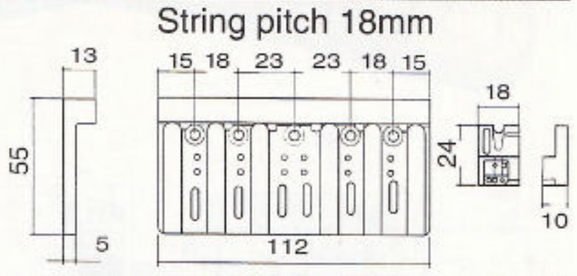

ACT-5

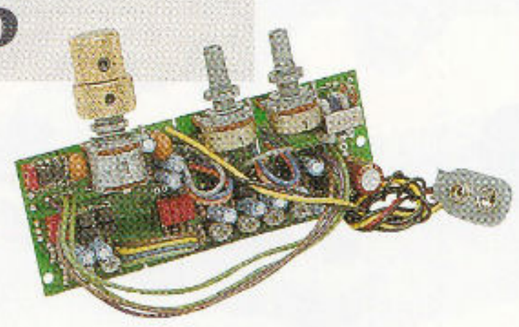

Guitar Bridges & Tailpieces

GTC101

Finishes /C.GG.B
Brass saddle,string pitch 10.5mm

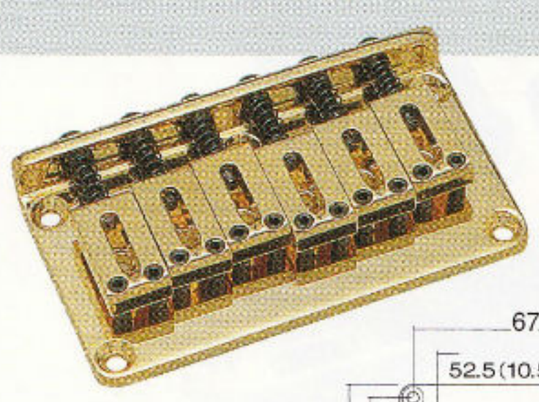

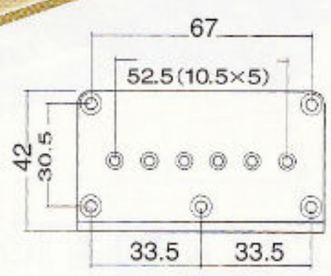

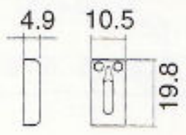

GTC201

Finishes /C.GG.B
Brass saddle,string pitch 10.8mm

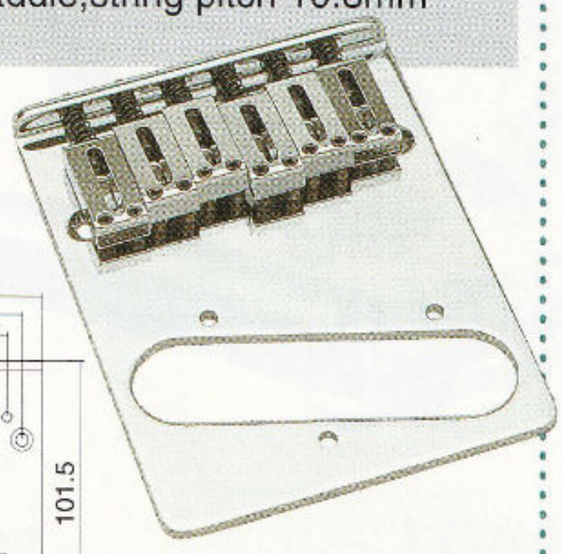

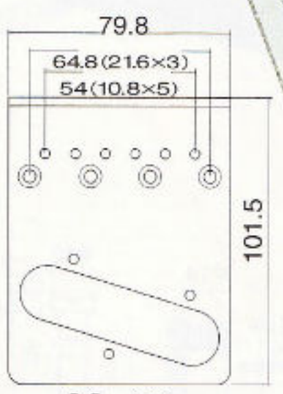

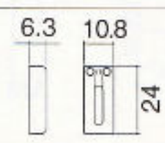

GTC202

Finishes / C.GG.B
Steel saddle,string pitch 10.8mm

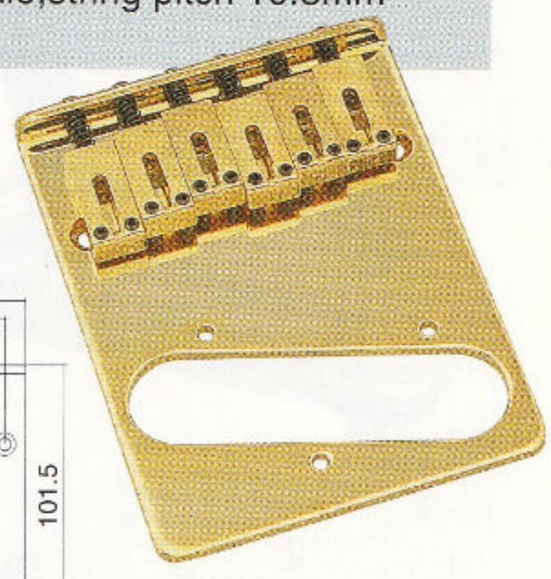

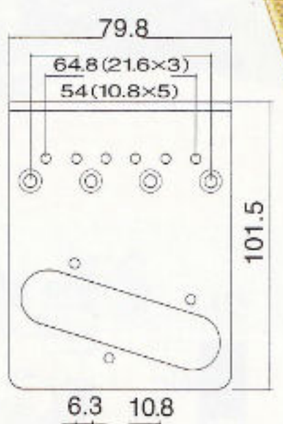

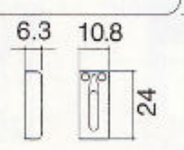

GTC301

Finishes /C.GG.B
Brass saddle,string pitch 10.5mm

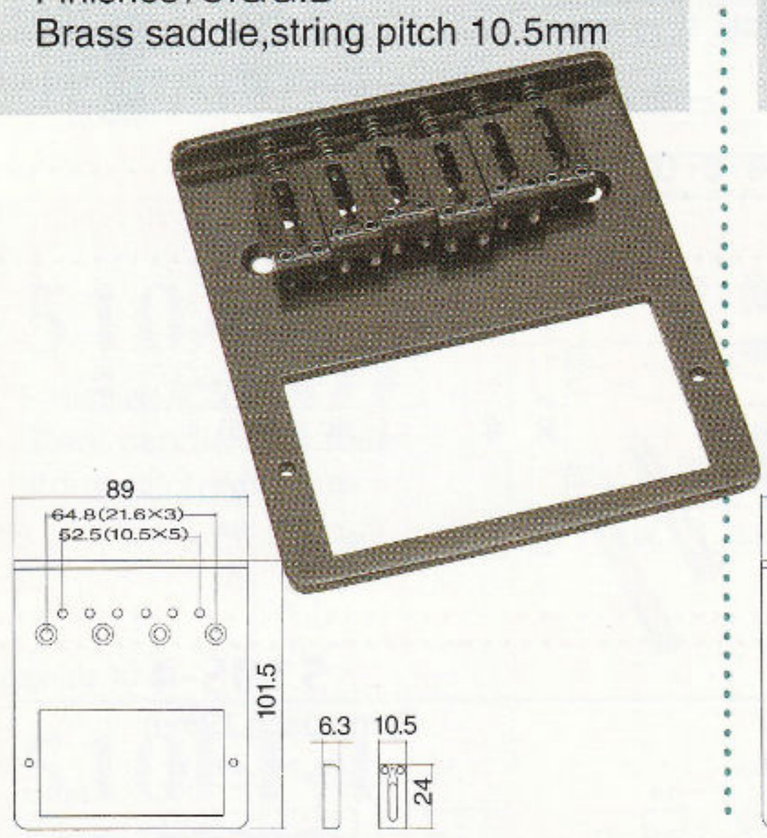

GTC302

Finishes /C.GG.B
Steel saddle,string pitch 10.5mm

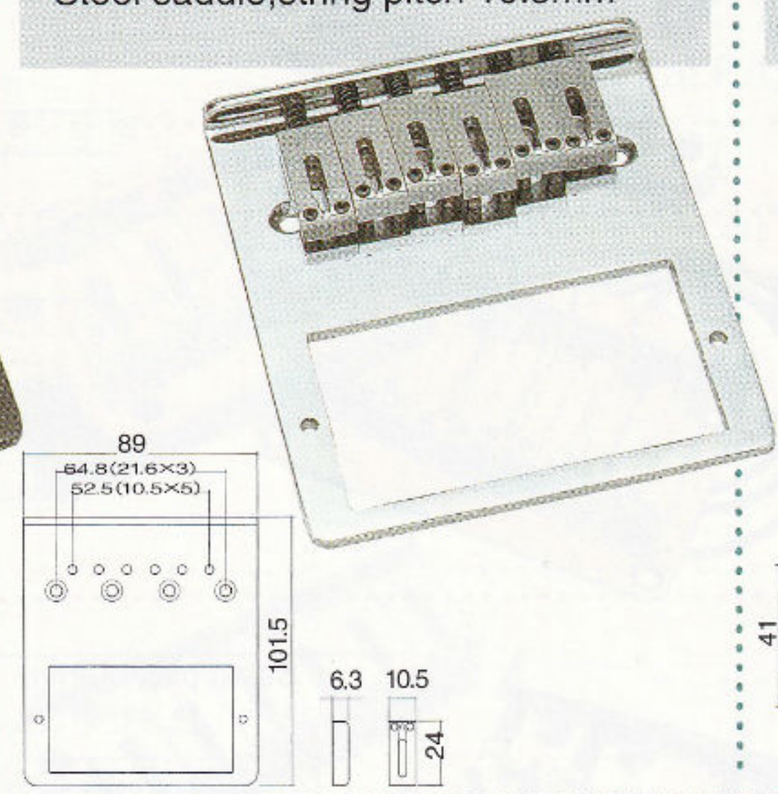

GTC12

Finishes/C.GG.B
Hard zinc saddle,string pitch 10.5mm

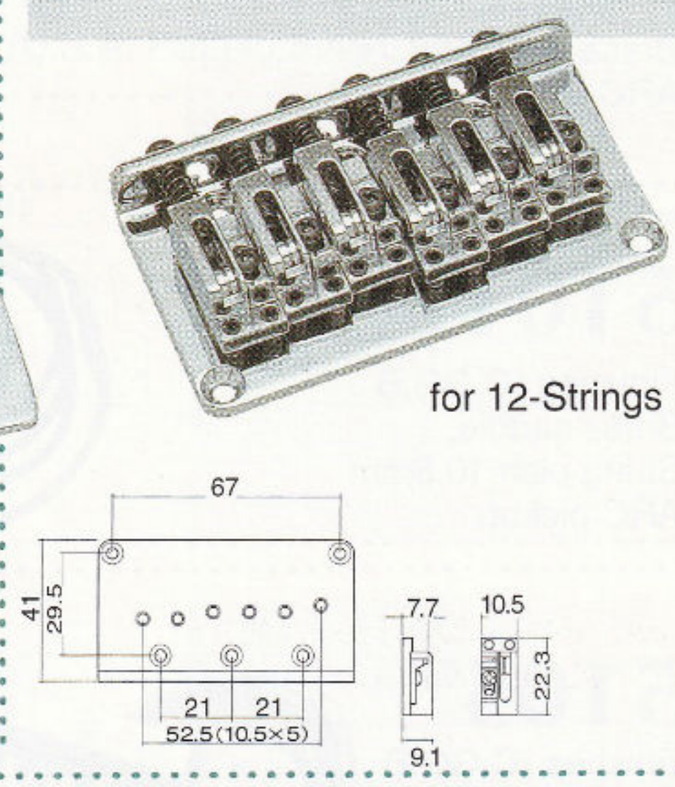

GE101Z

Finishes/N.C.GG.B
Material/Zinc diecast

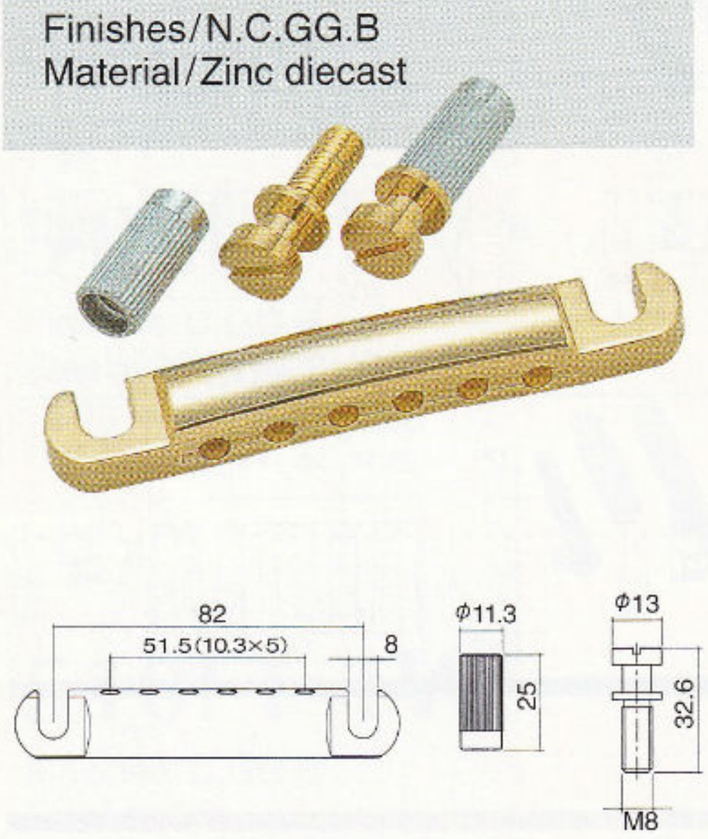

GE101Z-T

Finishes/N.C.GG.B
Material/Zinc diecast

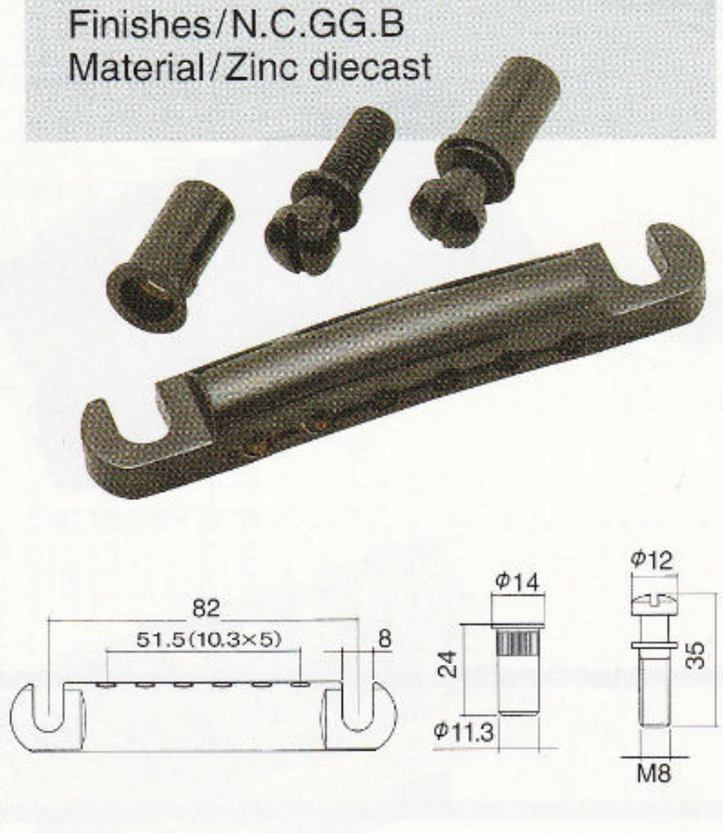

GE103B

Finishes/N.C.GG.B
Hard zinc saddle,

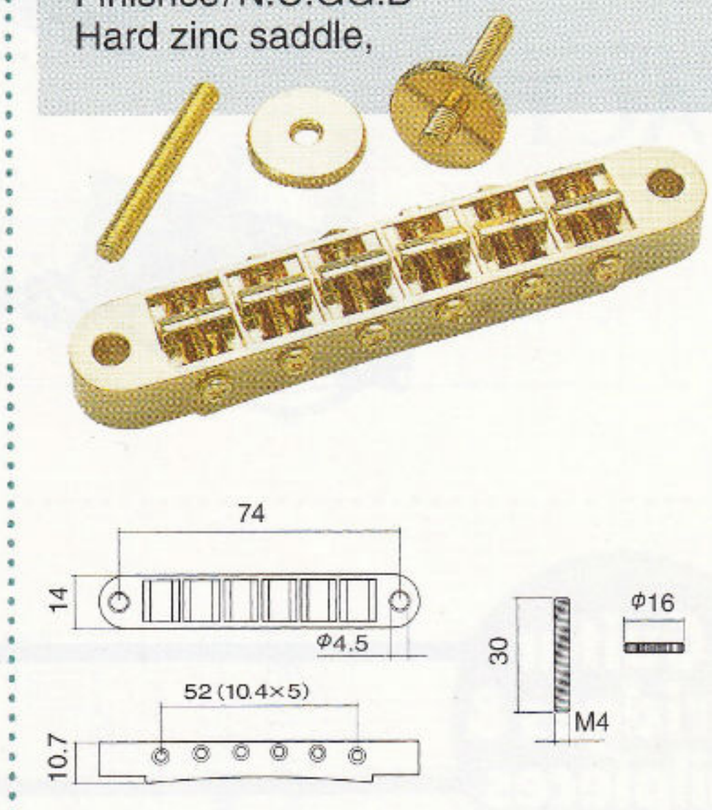

GE101AM

Finishes/N.C.GG.B
Material/Aluminum

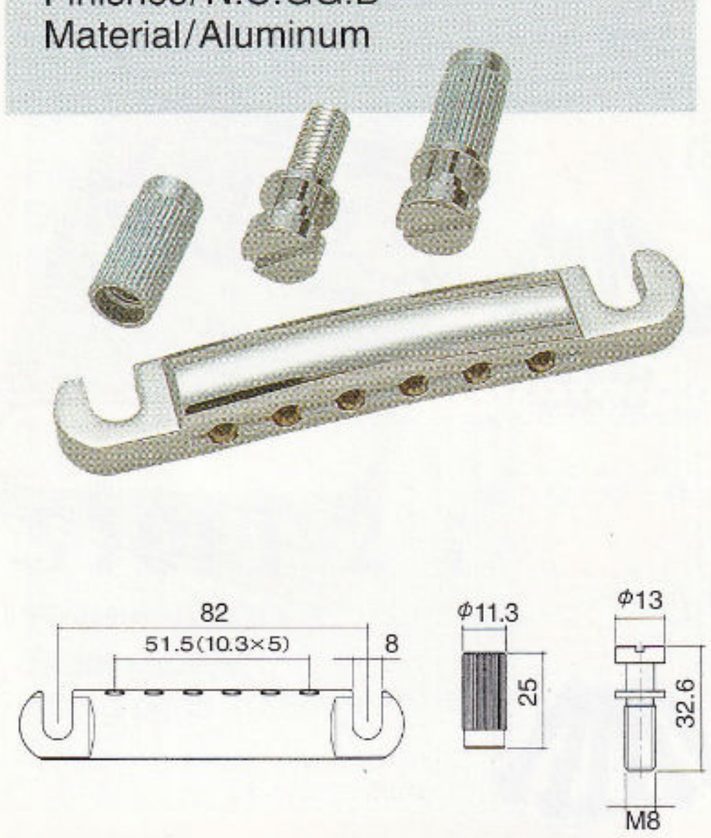

GE101AM-T

Finishes/N.C.GG.B
Material/Aluminum

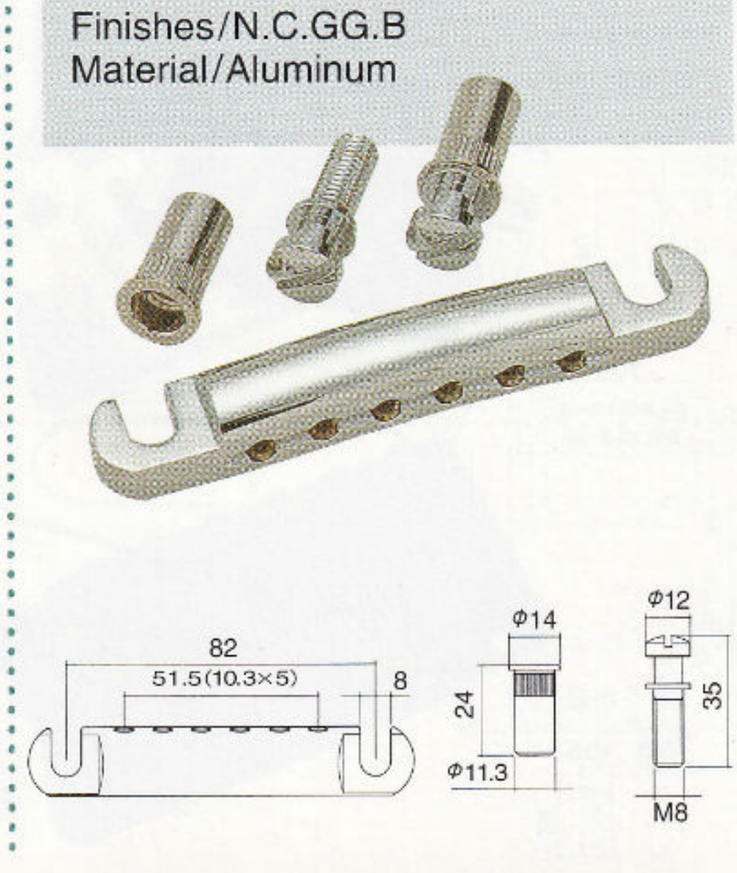

GE103B-T

Finishes/N.C.GG.B
Hard zinc saddle

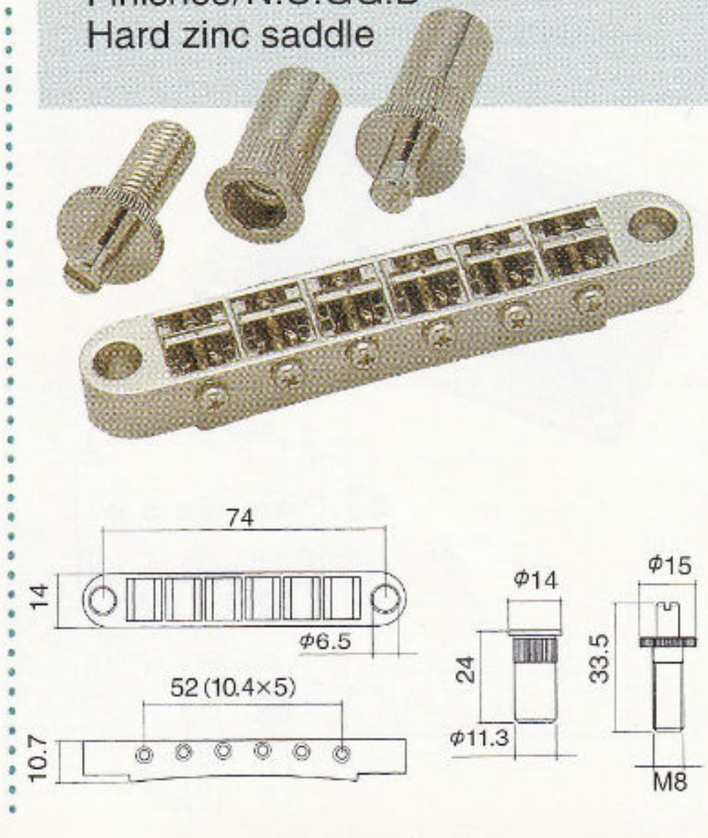

Finishes : N-Nickel C-Chrome GG-Gold B-Black Chrome

510LA

Finishes/C.GG.B
Material/Aluminum

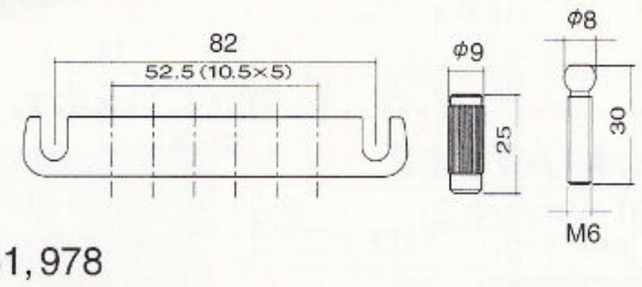

JAPAN Pat.NO.1, 951, 978
STUD LOCK-Pat.

510LB

Finishes/C.GG.B
Steel saddle

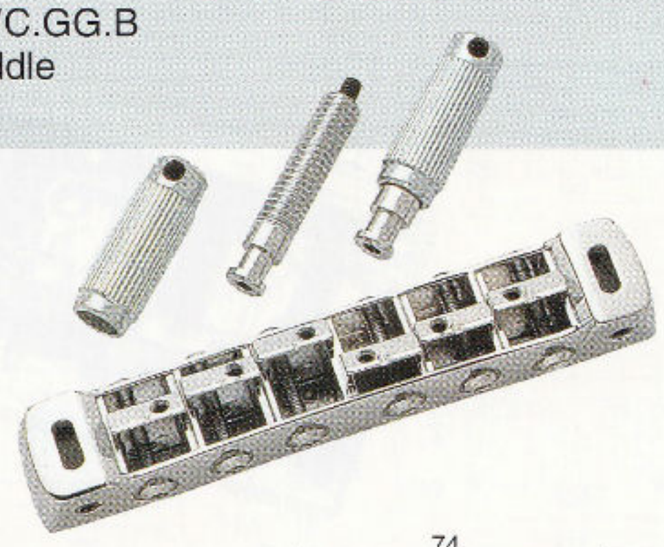

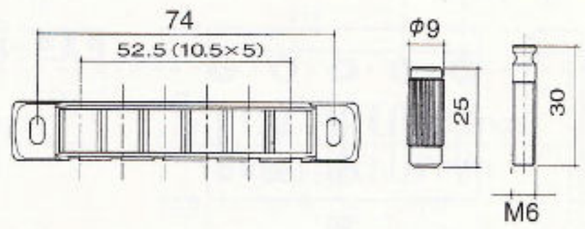

STUD LOCK-Pat.

510CB

Finishes /C.GG.B
Steel saddle

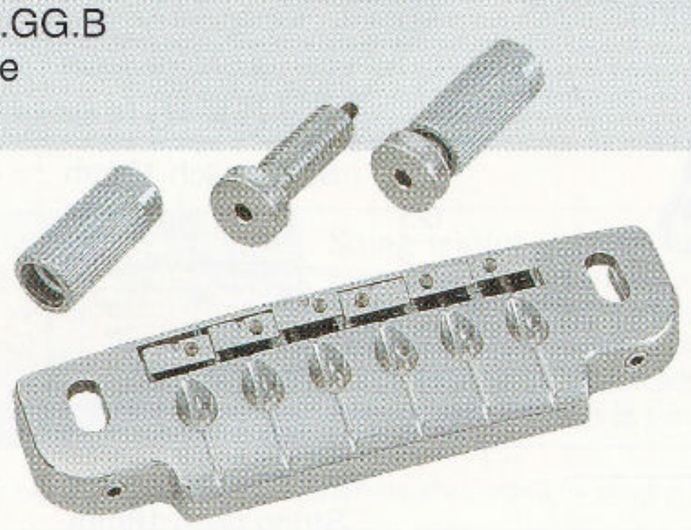

STUD LOCK-Pat.

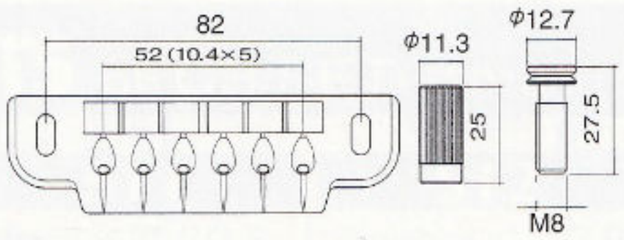

510TN

Finishes /C.GG.B
Brass saddle

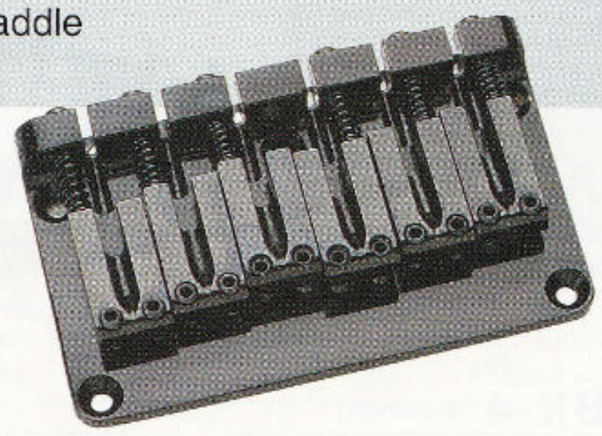

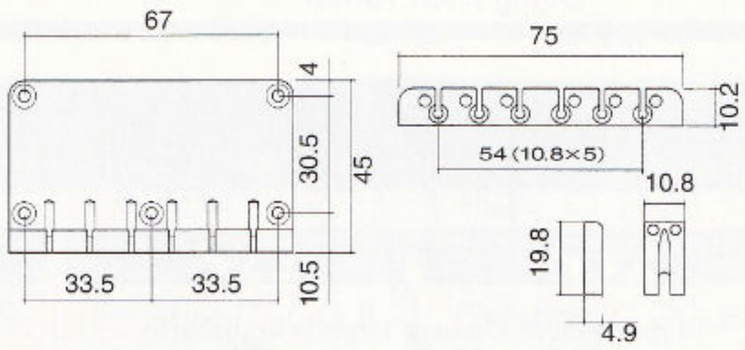

510BN

Finishes /N.C.GG.B
Brass saddle

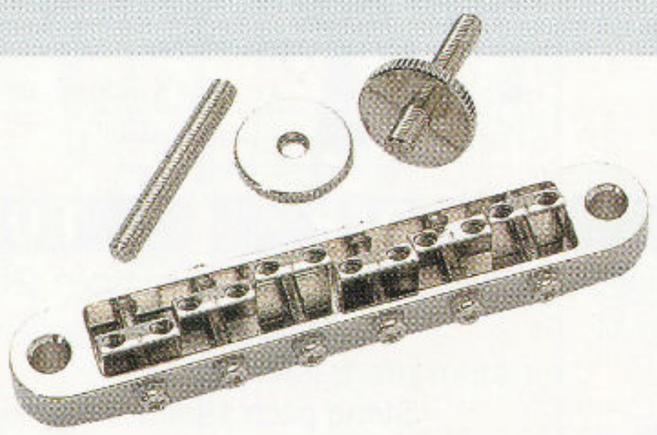

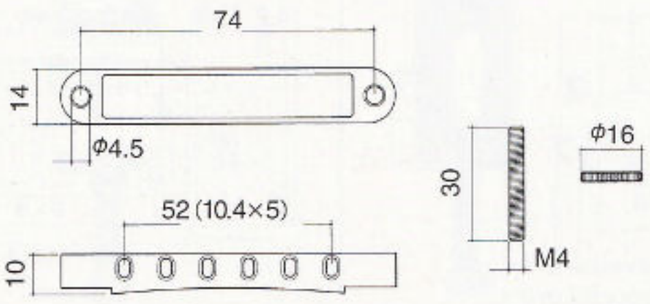

510BN-T

Finishes /N.C.GG.B
Brass saddle

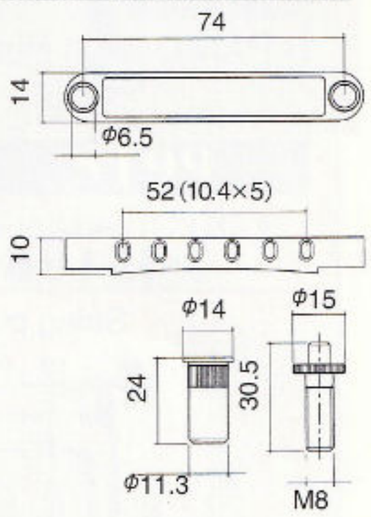

510BN-TS

GEB201

Finishes/C.CG.B
Brass saddle,string pitch 19mm

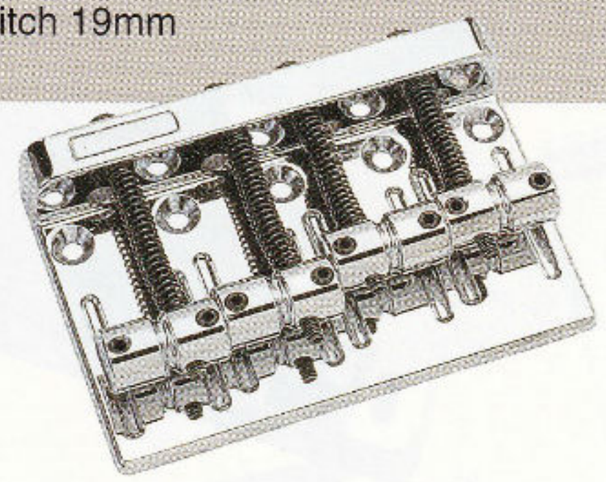

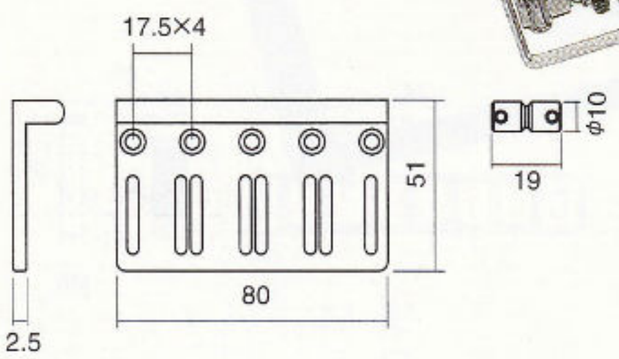

GEB203

Finishes/N.C.GG.B
Brass saddle,string pitch 19mm

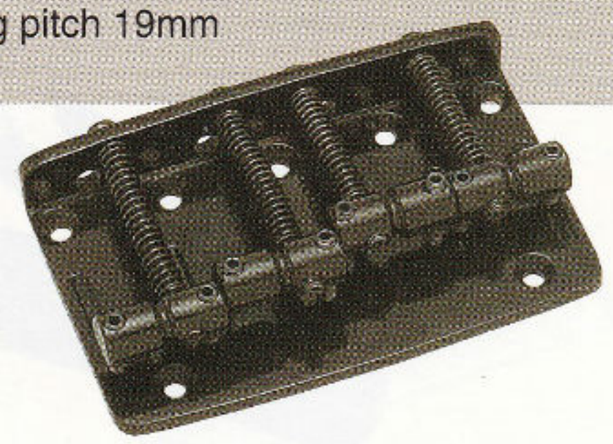

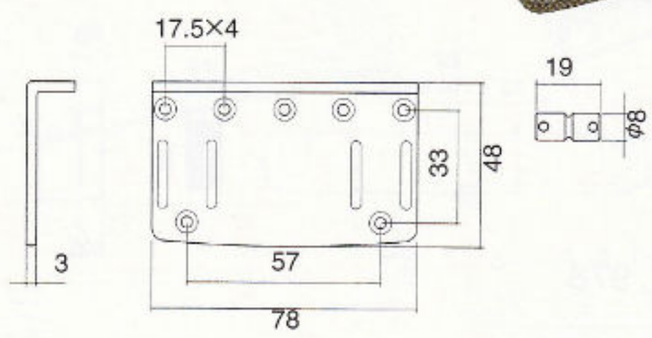

510 SERIES

510BR

Finishes/C.GG.B
Steel sadle
JAPAN Design Pat.NO.936,089
World Design pat.

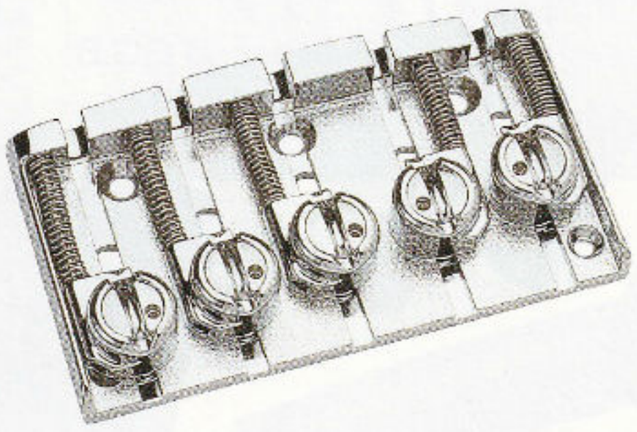

510BR-4 (4-strings)

String pitch 19mm

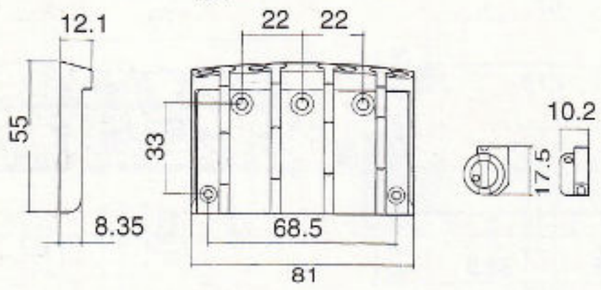

String pitch of 17mm or 18mm is available by machining production as special order.

510BR-5 (5-strings)

String pitch 18mm

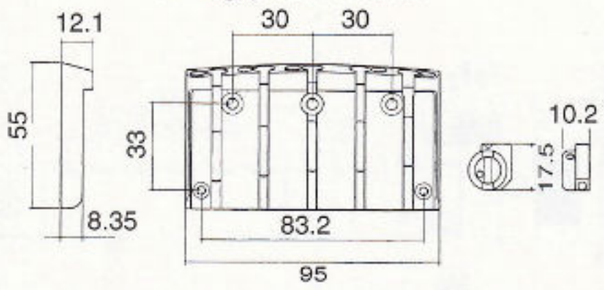

String pitch of 17mm or 19mm is available by machining production as special order.

510BR-6 (6-strings)

String pitch 17mm

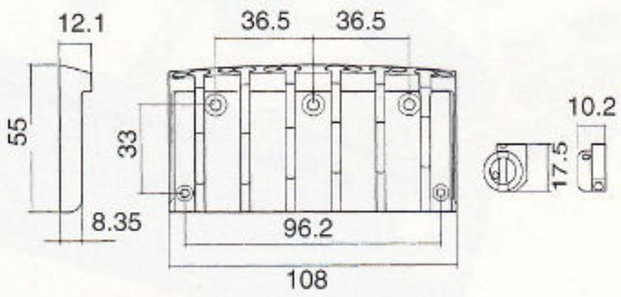

String pitch 18mm

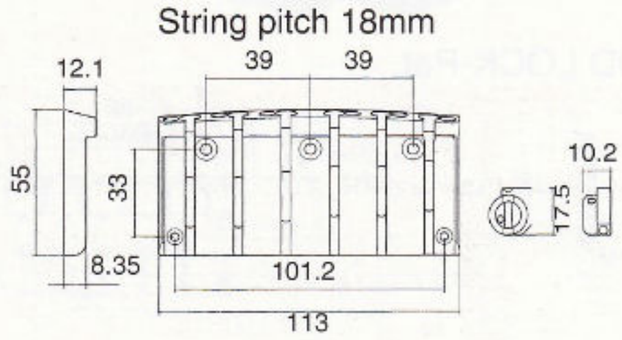

J510B

Finishes/C.GG.B
Steel sadle
JAPAN Design Pat.NO.936,086

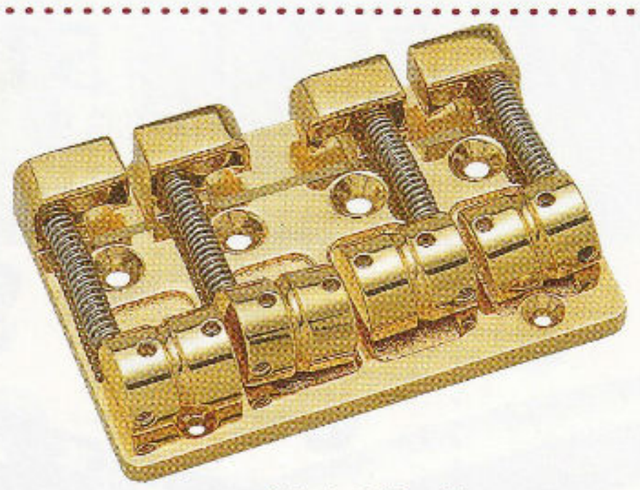

J510B-4 (4-strings)

String pitch 19mm

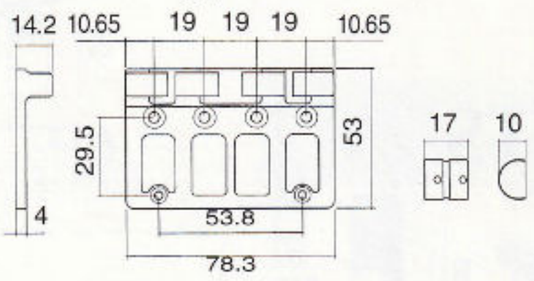

String pitch of 18mm is available by machining production as special order.

J510B-5 (5-strings)

String pitch 18mm

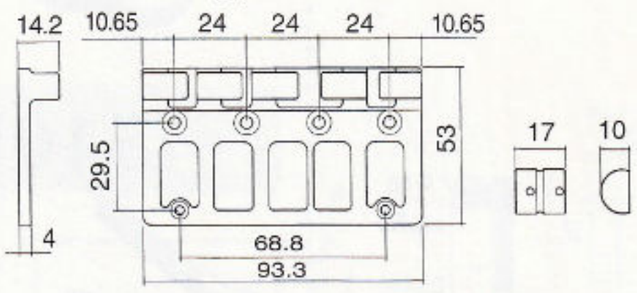

String pitch of 19mm is available by machining production as special order.

J510B-6 (6-strings)

String pitch 18mm

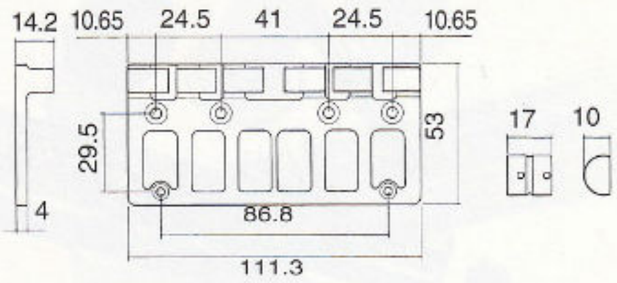

String pitch 19mm

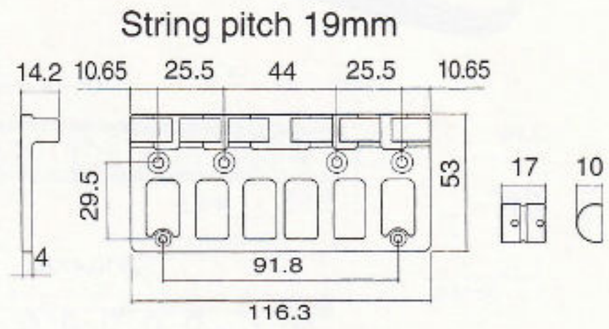

Finishes : N-Nickel C-Chrome GG-Gold B-Black Chrome

510B

Finishes/C.GG.B
Steel saddle
JAPAN Pat.NO.1,951,962

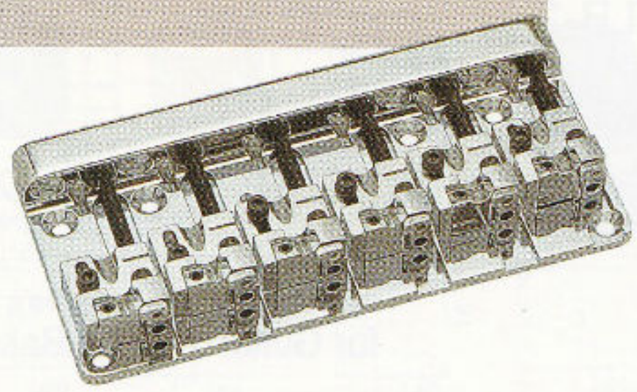

510B-4 (4-strings)

String pitch 18mm

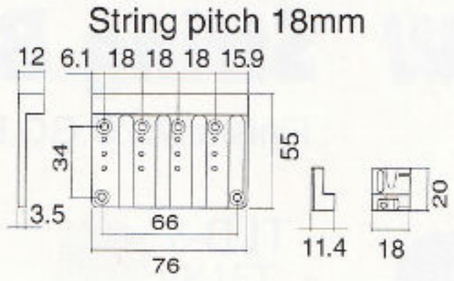

510B-5 (5-strings)

String pitch 18mm

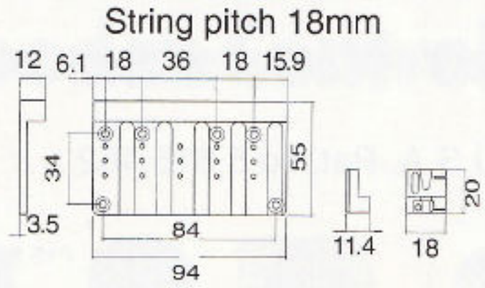

510B-6 (6-strings)

String pitch 17mm

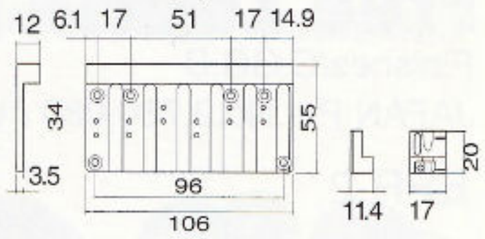

String pitch 19mm

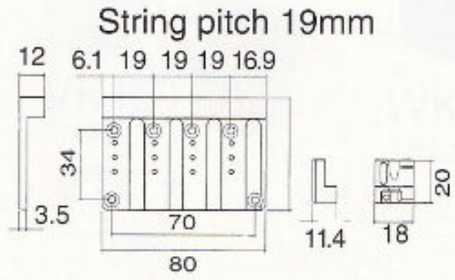

String pitch 19mm

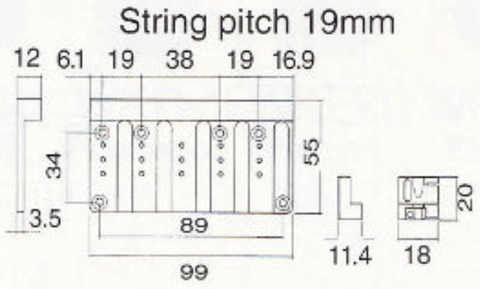

String pitch 18mm

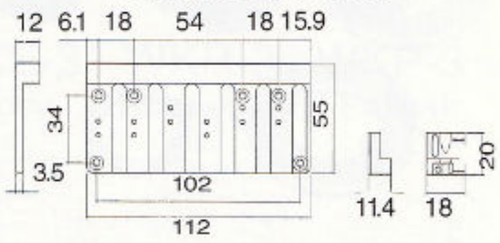

510TA

Finishes/C.GG.B
Steel saddle

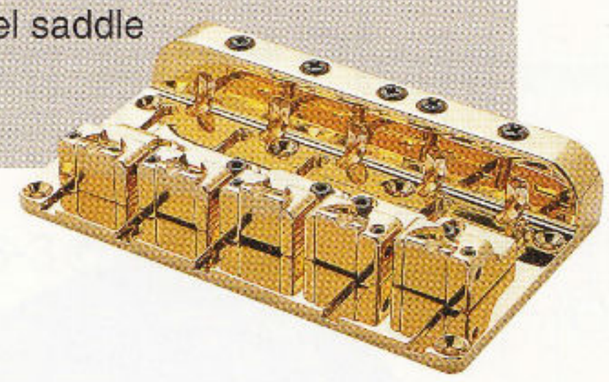

510TA-4 (4-strings)

String pitch 19mm

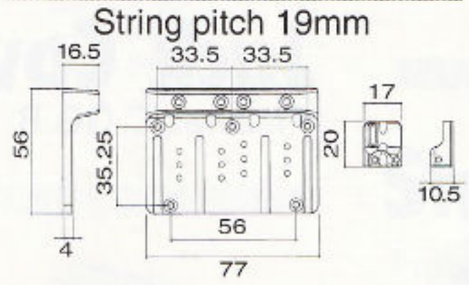

String pitch of 17mm or 18mm is available by machining production as special order.

510TA-5 (5-strings)

String pitch 18mm

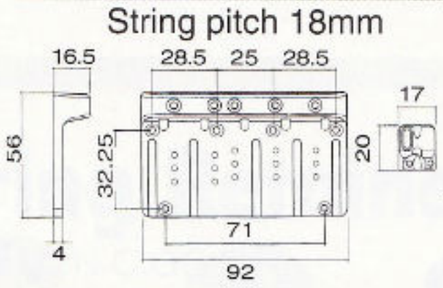

String pitch of 17mm or 19mm is available by machining production as special order.

510TA-6 (6-strings)

String pitch 17mm

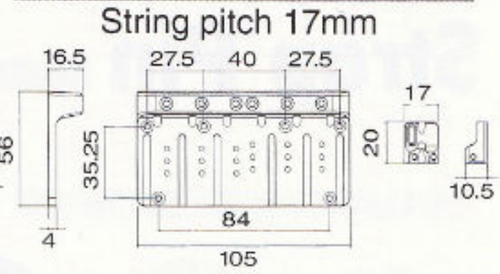

String pitch 18mm

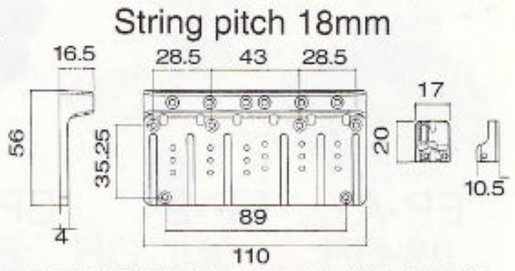

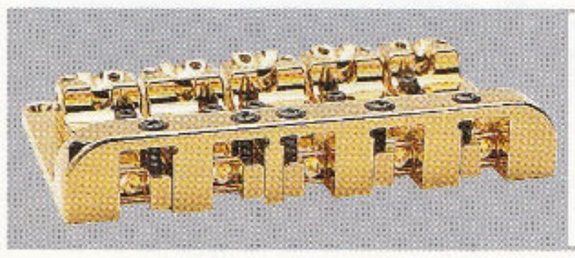

String tension / break angle over bridge saddle is very important to overall sound and tone of instrument, especially on five or six string bass bridges. Low "B" strings are particularly sensitive to these adjustment. A too acute angle on the saddle can result in this strings "speaking length" being reduced and sounding "dead" or "Unresponsive" when plucked. Being able to raise or lower the ball end in relation to string / saddle intonation point will be of great advantage to all bass players. Used in conjunction with H.A.P. tuning keys this bridge dramatically improves the sound and feel of your bass.

*This is not a fine tuning system.

Choose the materials for base plate from brass and aluminum when orderd for string pitches of 17mm or 18mm of 4-string version, 17mm or 19mm of 5-string version and all pitches of 6-string version.

SADDLE SETS 6PCS/SET(S201and S203 are 4pcs/set)

S201

Finishes/C.GG.B
Material/Brass

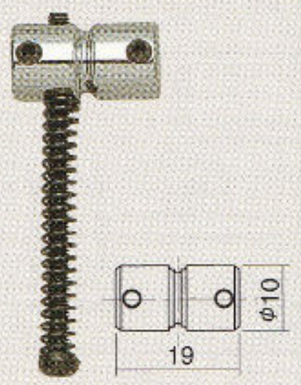

S11

Finishes/C.GG.B
Material/Brass

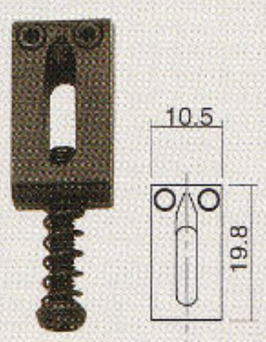

S12

Finishes/C.GG.B
Material/Brass

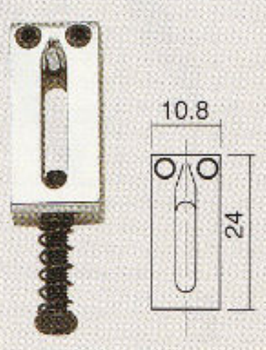

S13

Finishes/C.GG.B
Material/Brass

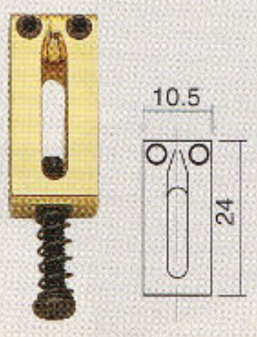

S22

Finishes/C.GG.B
Material/Steel

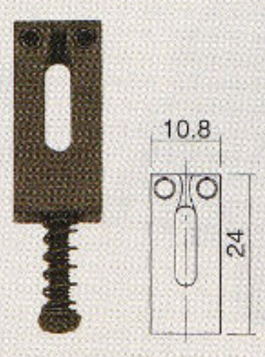

S32

Finishes/C.GG.B
Material/Steel

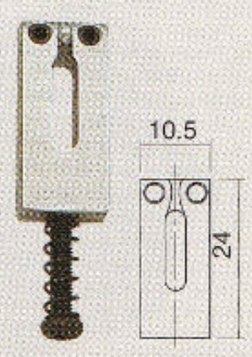

S203

Finishes/N.C.GG.B
Material/Brass

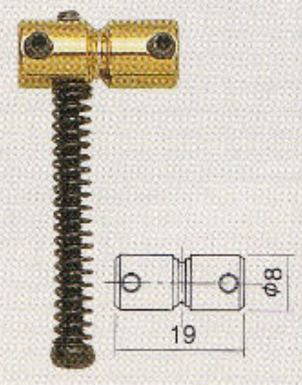

S101

Finishes/N.GG.B
Material/
Steel(sheet metal)

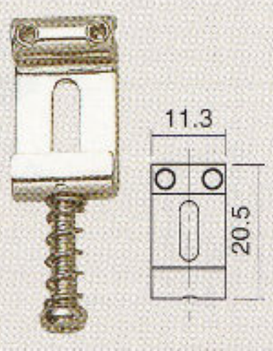

S102

Finishes/C.GG.B
Material/Steel

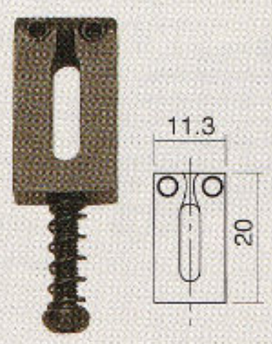

S101S

Finishes/N.GG.B
Material/Steel
(sheet metal)/U.S.A
threads screws

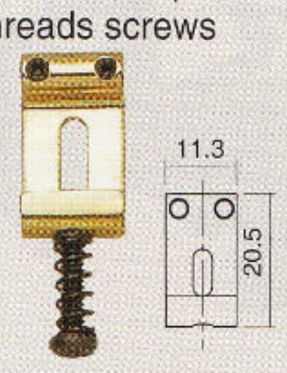

S108

Finishes/C.GG.B
Material/
Steel(sheet metal)

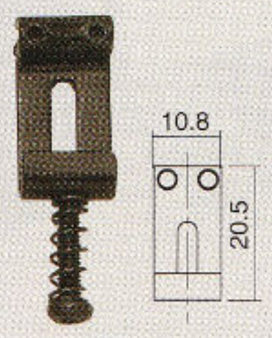

S199

Finishes/C.GG.B
Material/Steel

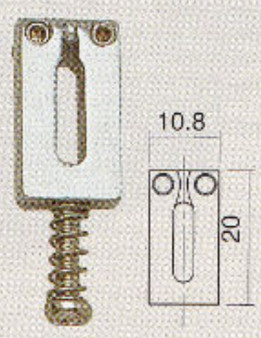

Free Lock

Finishes/C.GG.B

JAPAN Pat.No.2,780,080 / U.S.A. Pat.No.5,615,462

EPR-2

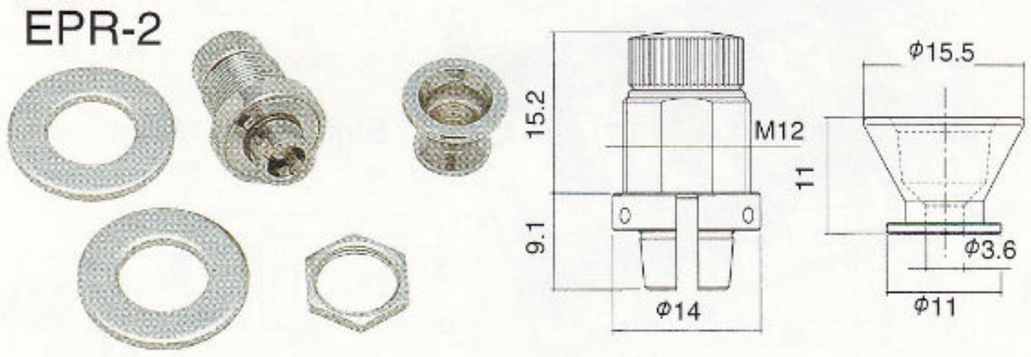

String Bushing

Finishes/N.C.GG.B

TLB-1

TLB-2

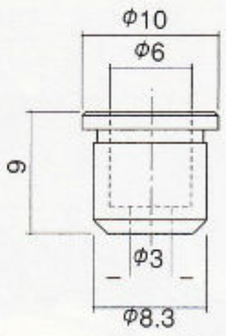

for Guitar

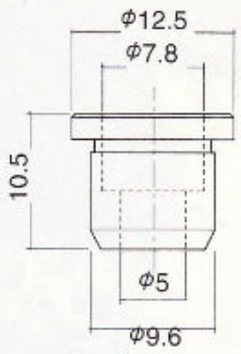

for Bass

Strap Pin

EP-A1

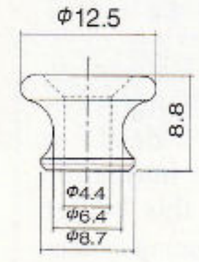

Aluminum

EP-B1

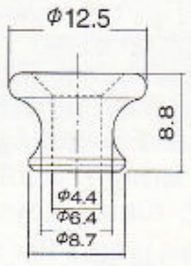

Finishes/ N.C.GG.B

EP-B2

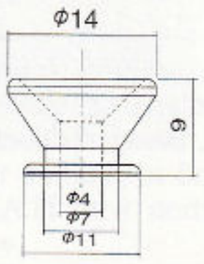

Finishes/ N.C.GG.B

EP-B3

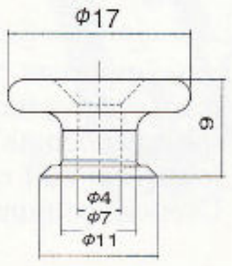

Finishes/ N.C.GG.B

EP-FR2

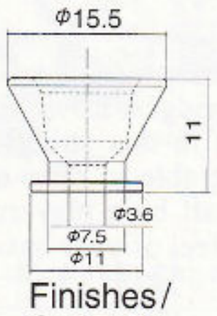

Finishes/ C.GG.B

Jack Cover

Finishes/C.GG.B

JCS-1

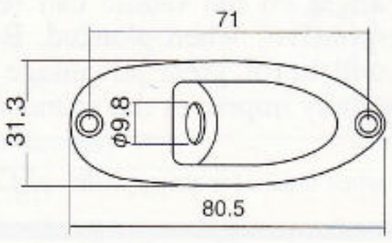

JCB-2

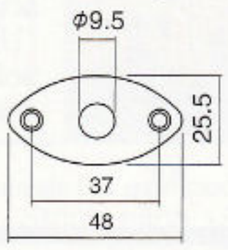

JCB-4

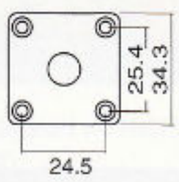

Battery Box

BB-04W

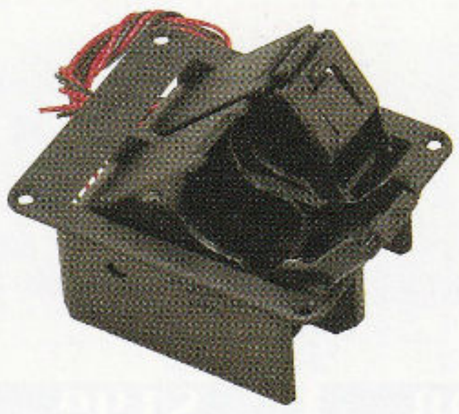

BB-02

BB-04W

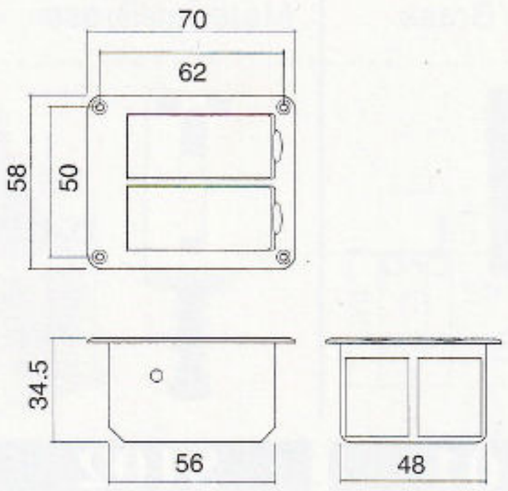

BB-02

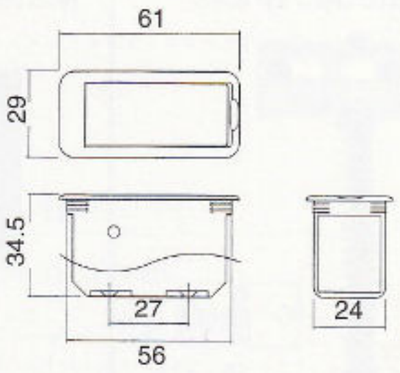

BB-04

BB-03

BB-04

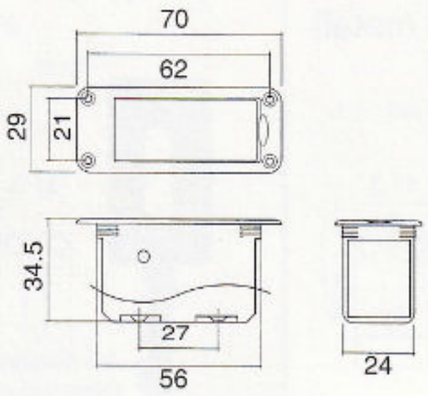

BB-03

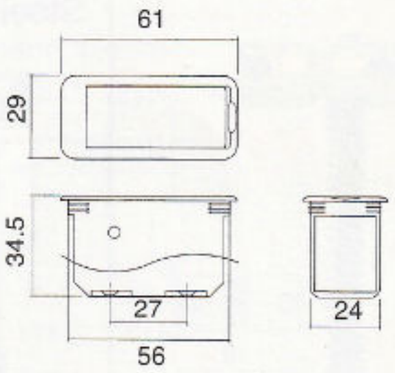

Finishes : N-Nickel C-Chrome GG-Gold B-Black Chrome

Dome Knob

Finishes/C.GG.B

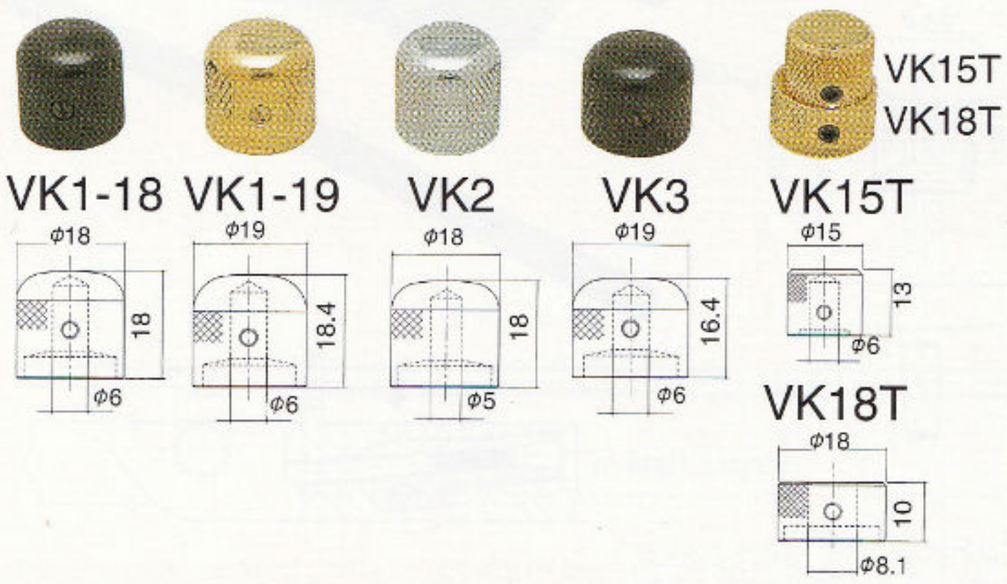

Wooden Control Knob

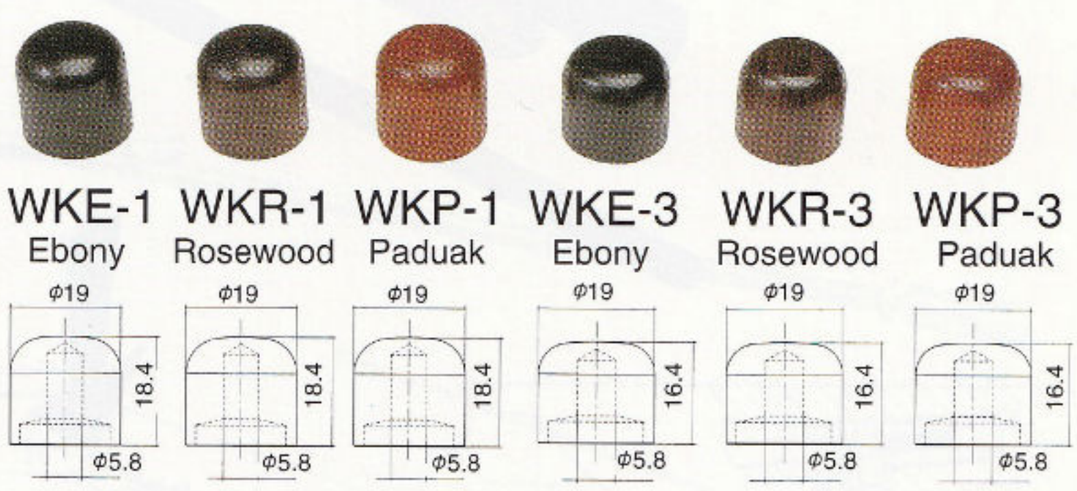

Neck Joint Plate

Finishes/C.GG.B

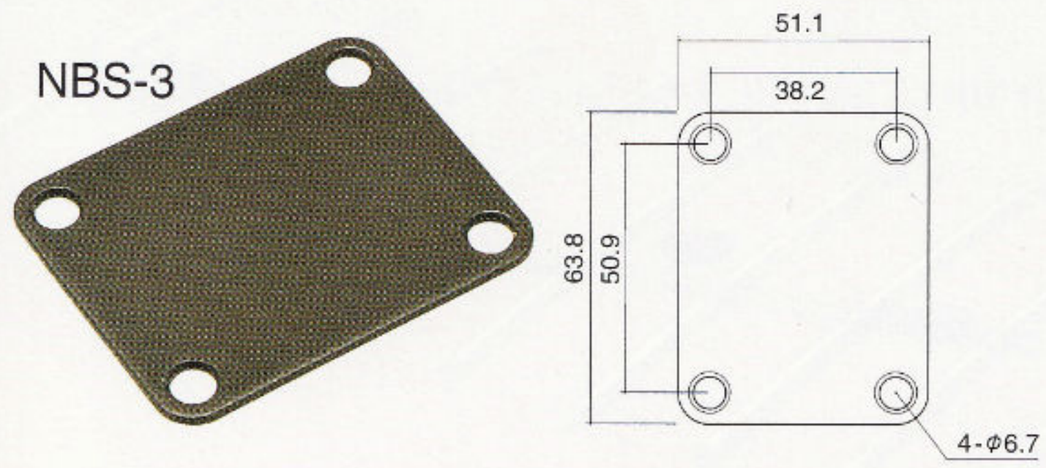

String Retainer

Finishes/N.C.GG.B

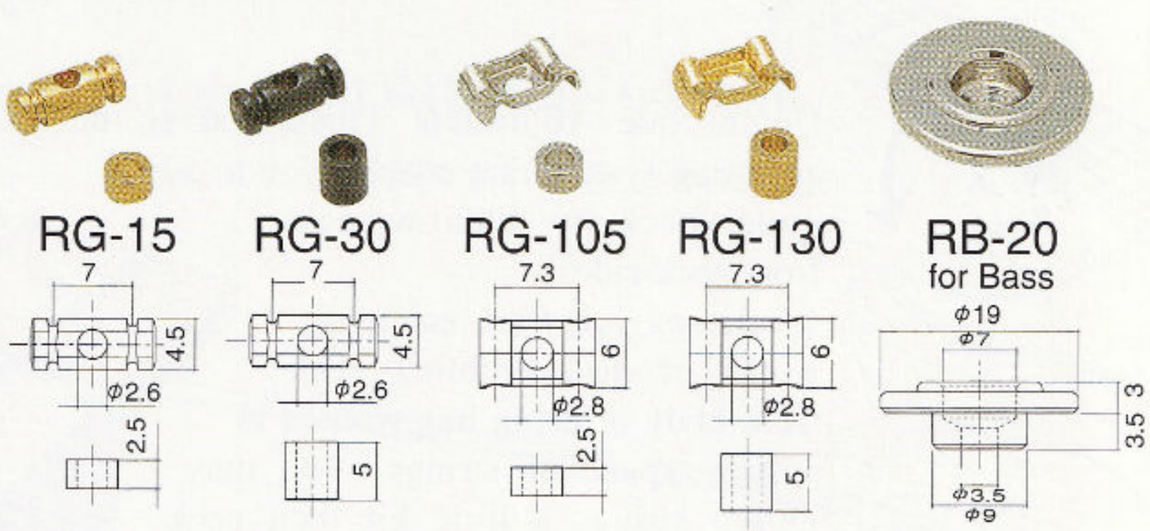

Tension Bar

Finishes/C.GG.B
(Screw-Black Only)

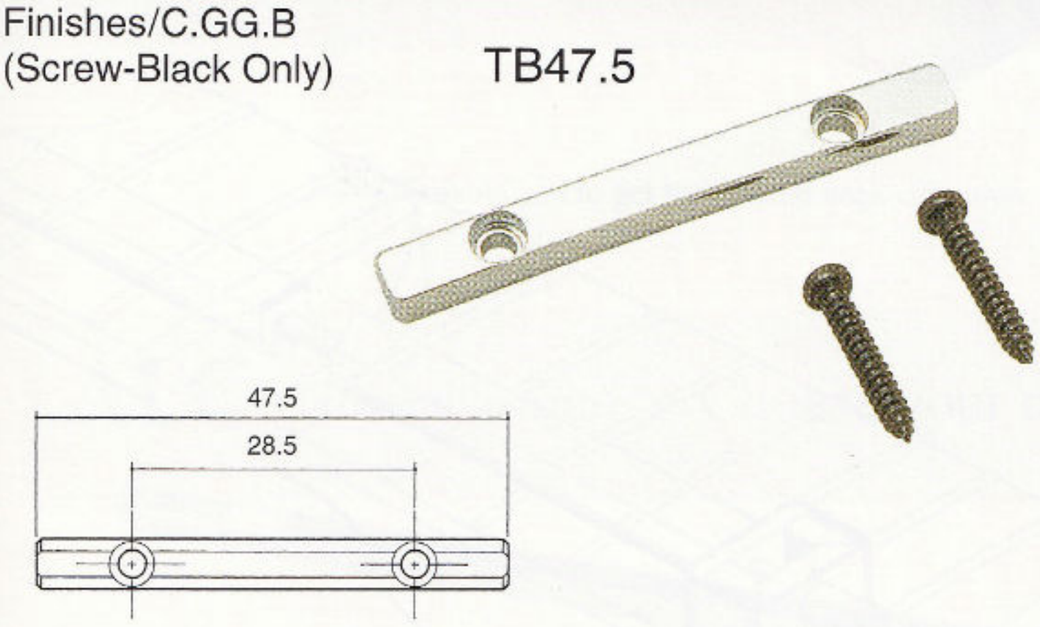

Wrench Holder

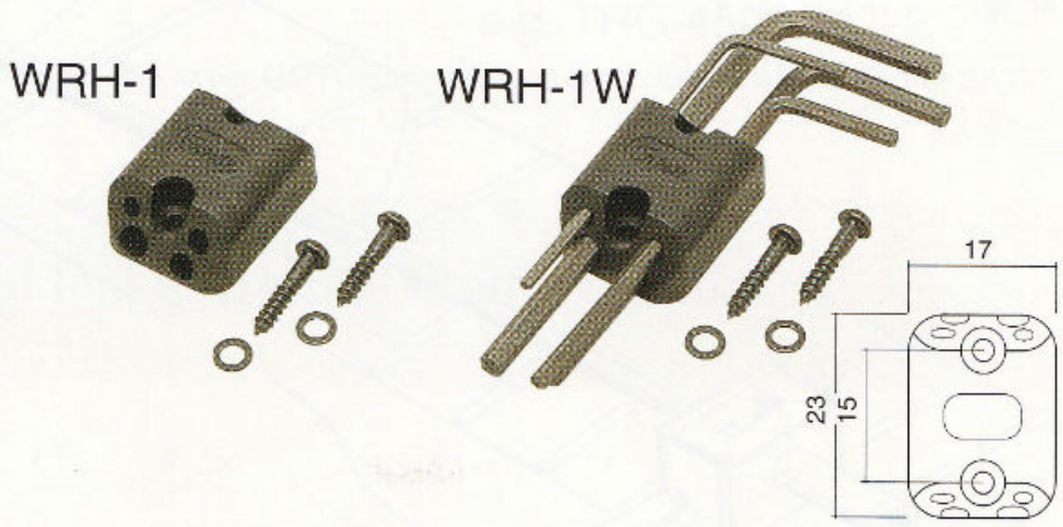

Spring Holder

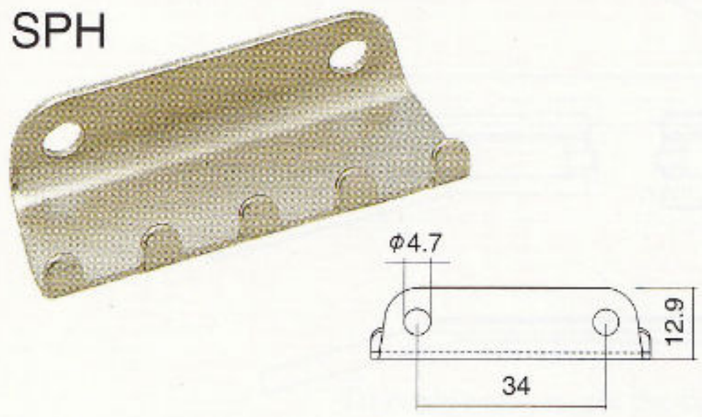

Spring

Power Spring

Side Adjuster

Worldwide Pat.

SAT-1
for one piece neck type

SAT-2
for finger board type

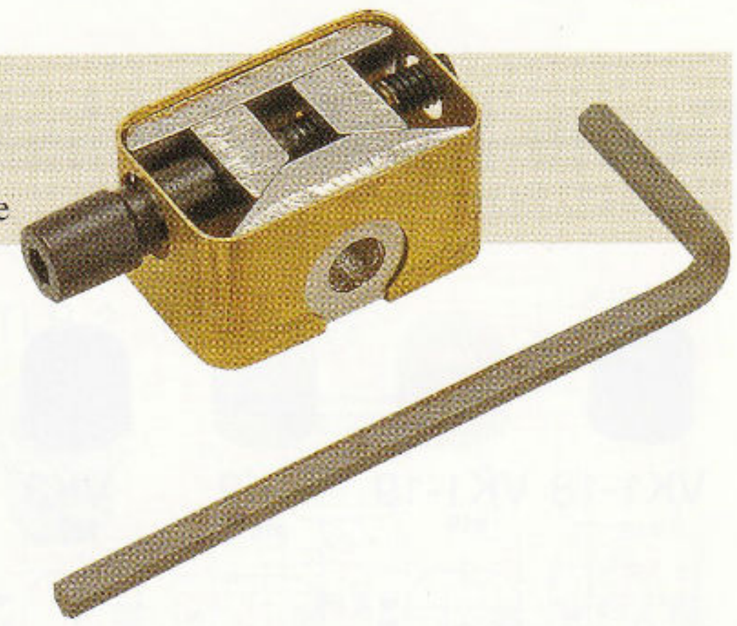

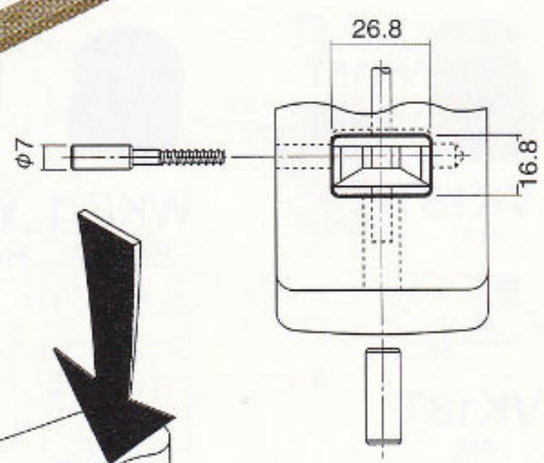

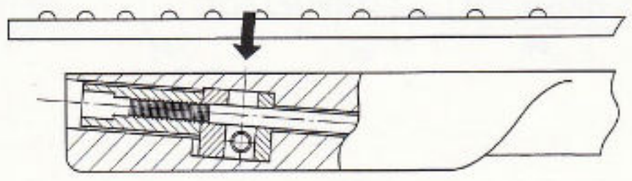

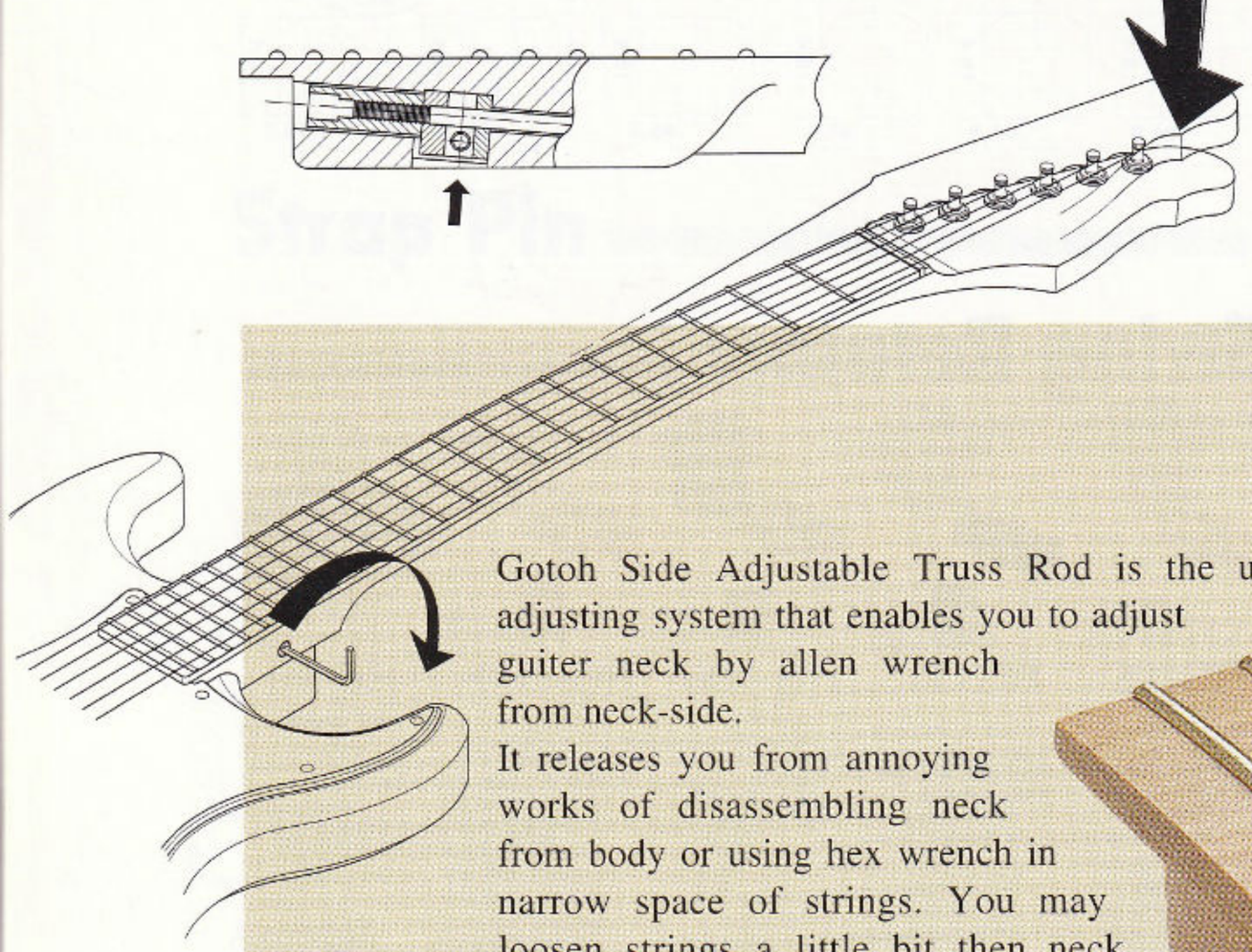

Gotoh Side Adjustable Truss Rod is the ultimate adjusting system that enables you to adjust guiter neck by allen wrench from neck-side.
It releases you from annoying works of disassembling neck from body or using hex wrench in narrow space of strings. You may loosen strings a little bit then neck adjustment can simply be done.

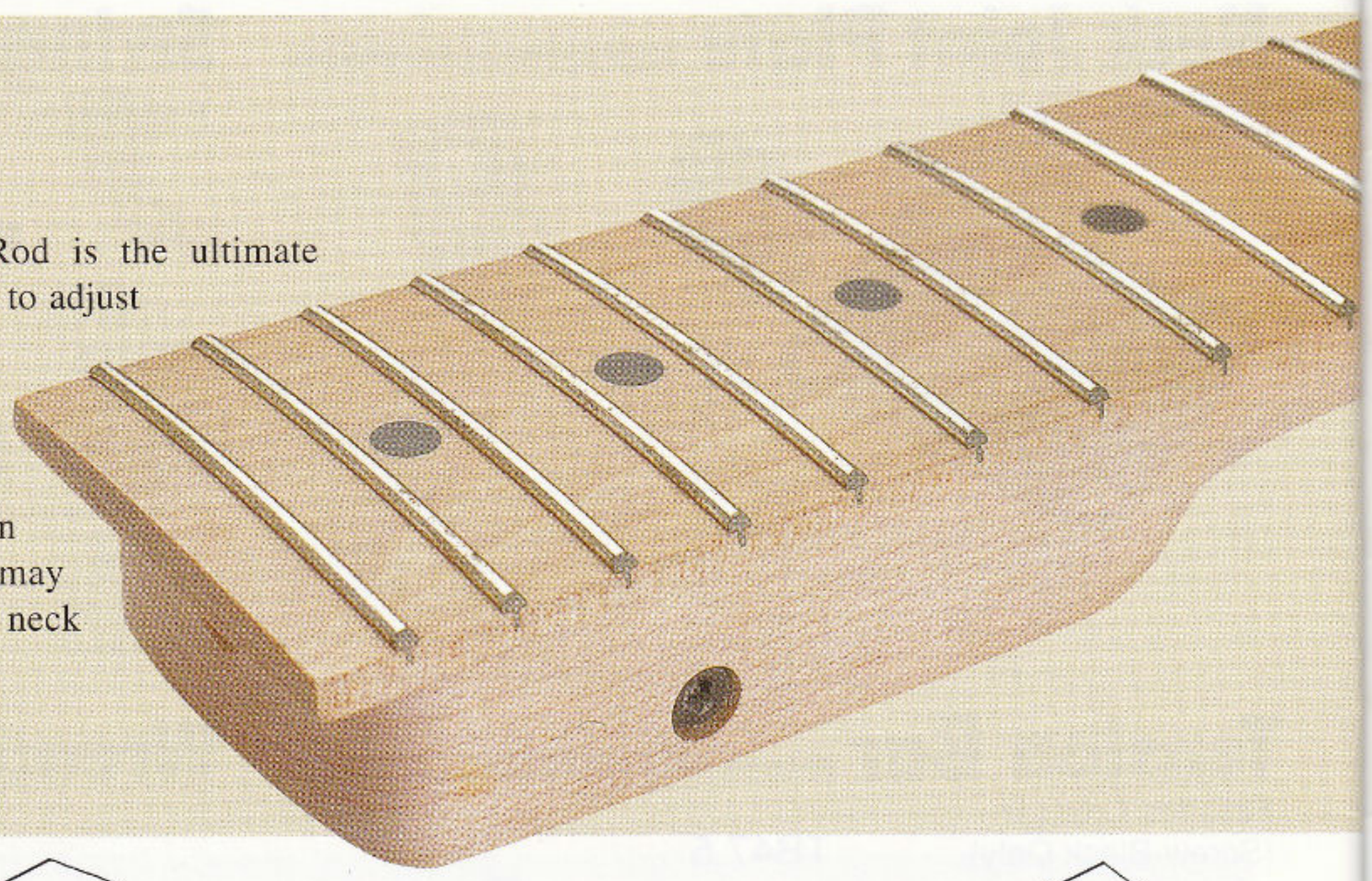

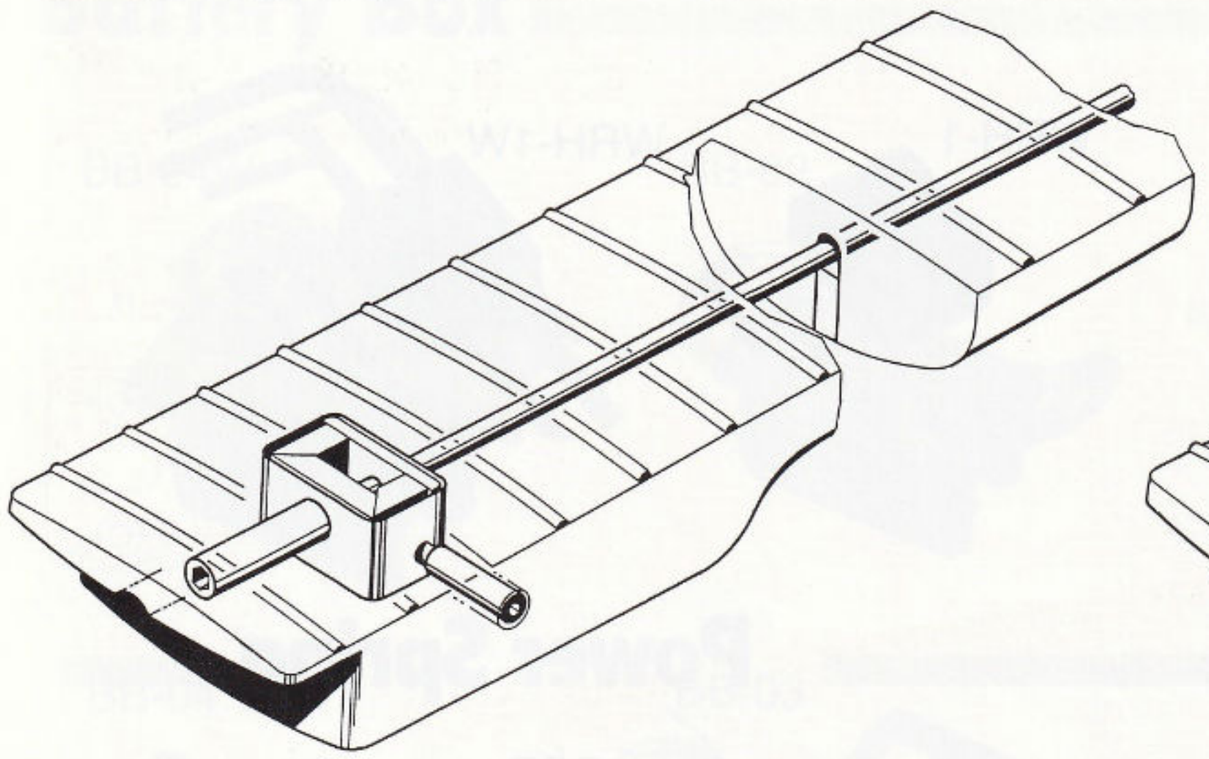

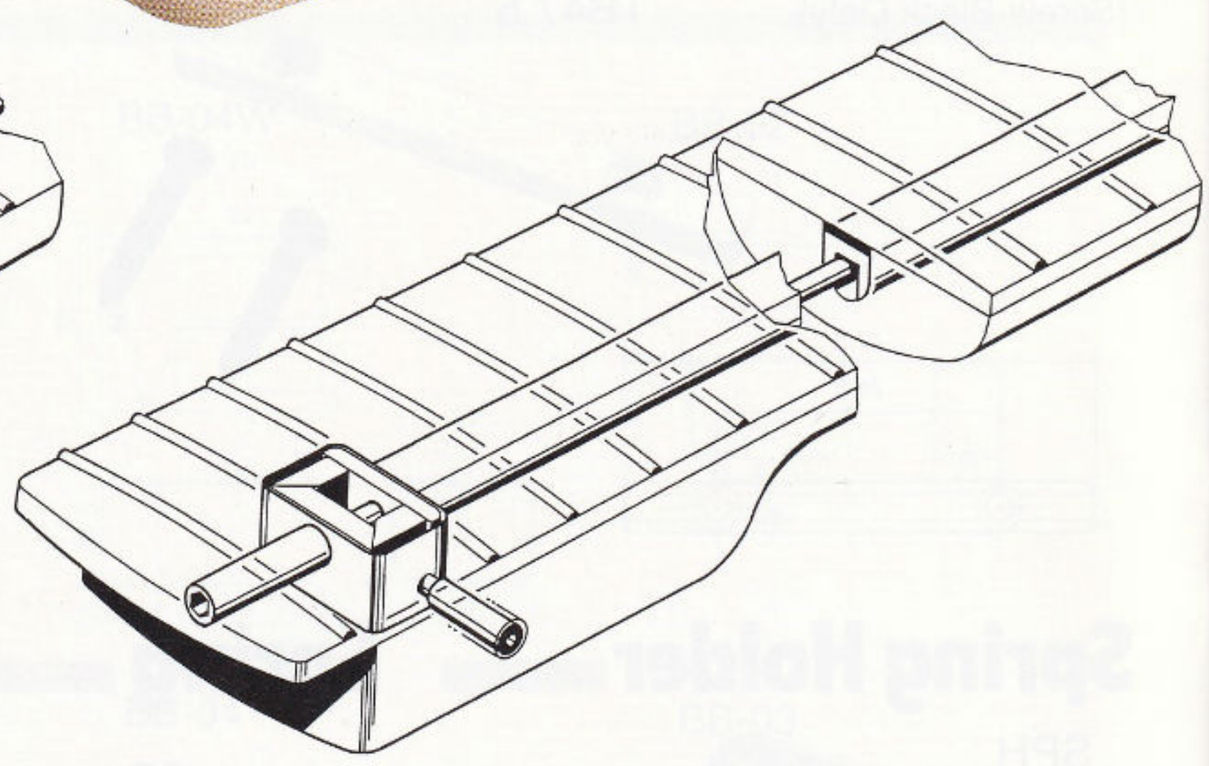

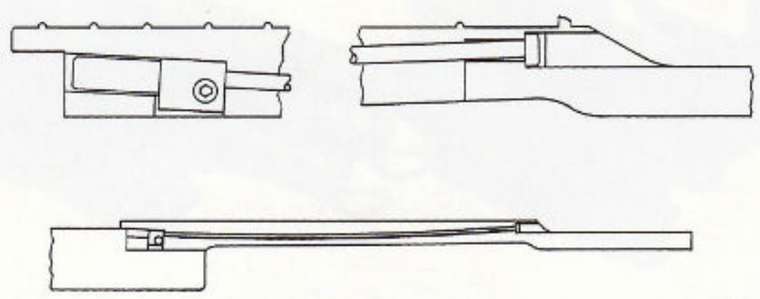

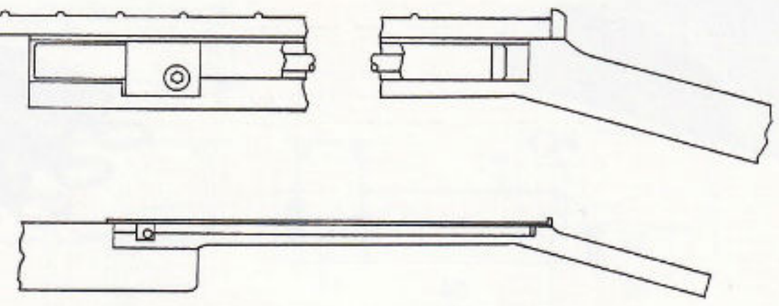

Truss Rod

TRF- (overall length) Choose your desired length from 410mm - 640mm

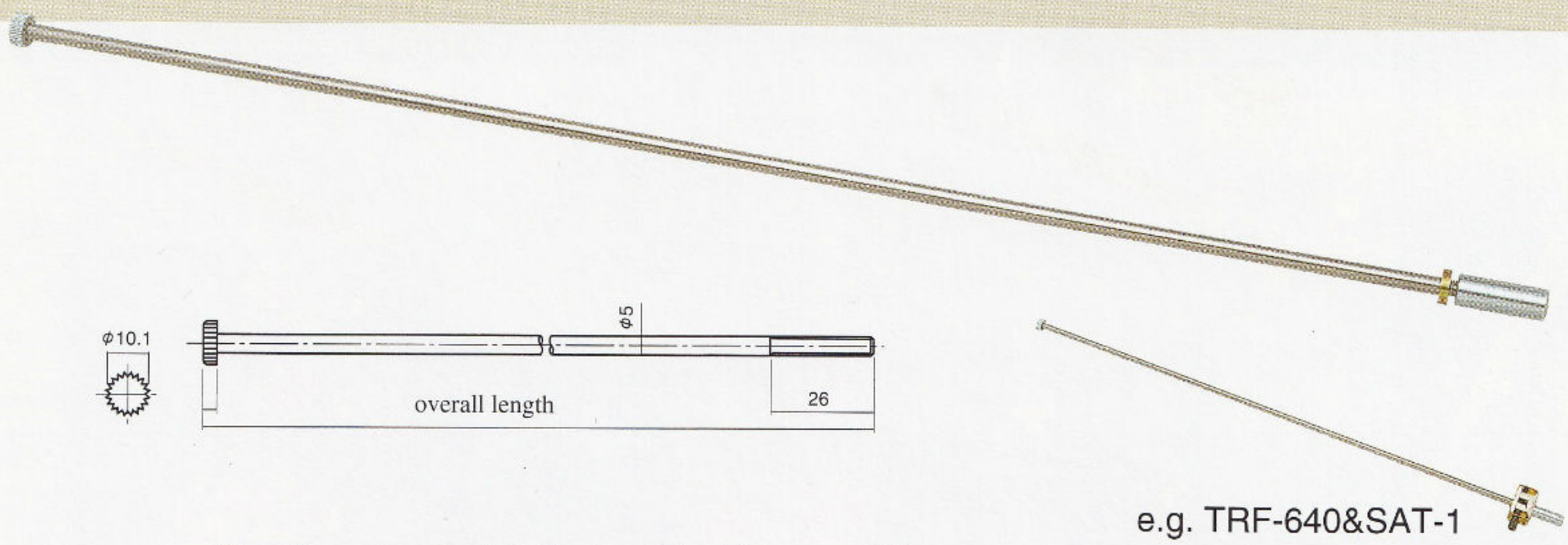

To enable you to get the desired neck condition, it is recommendable to use GOTOH truss rods in combination with SAT-1 or SAT-2.

TRG- (overall length) Choose your desired length from 410mm - 640mm

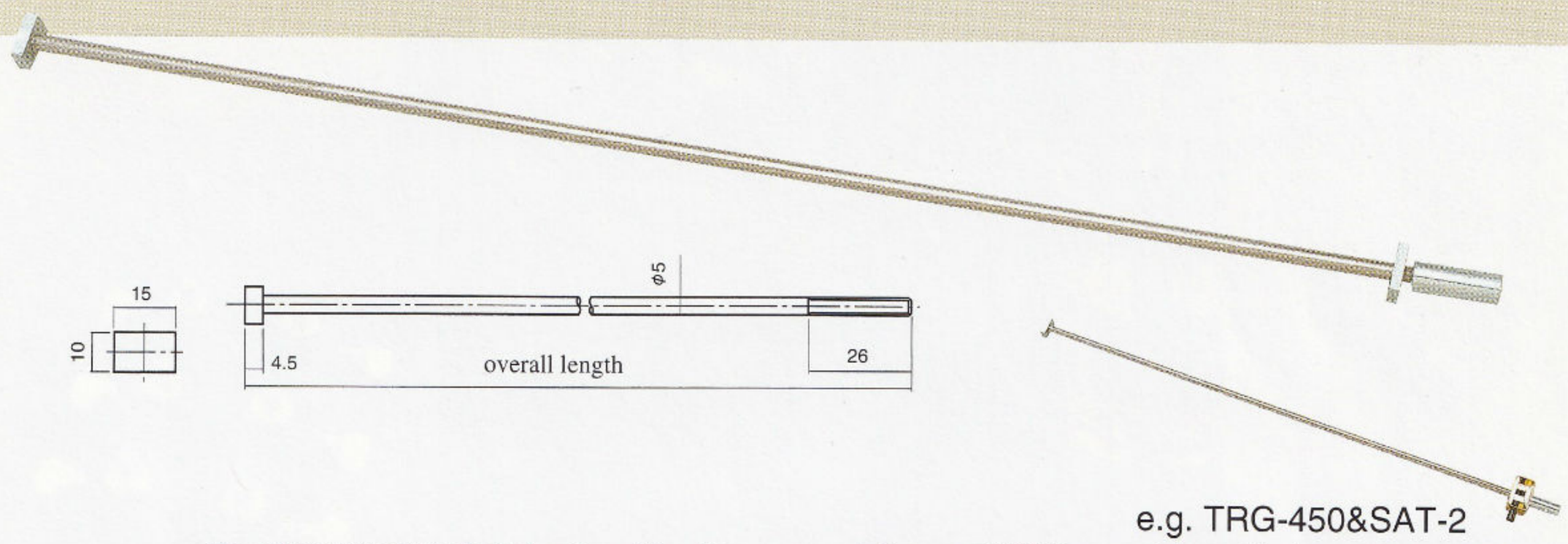

To enable you to get the desired neck condition, it is recommendable to use GOTOH truss rods in combination with SAT-1 or SAT-2.

ALC- (overall length) Choose your desired length from 300mm - 620mm

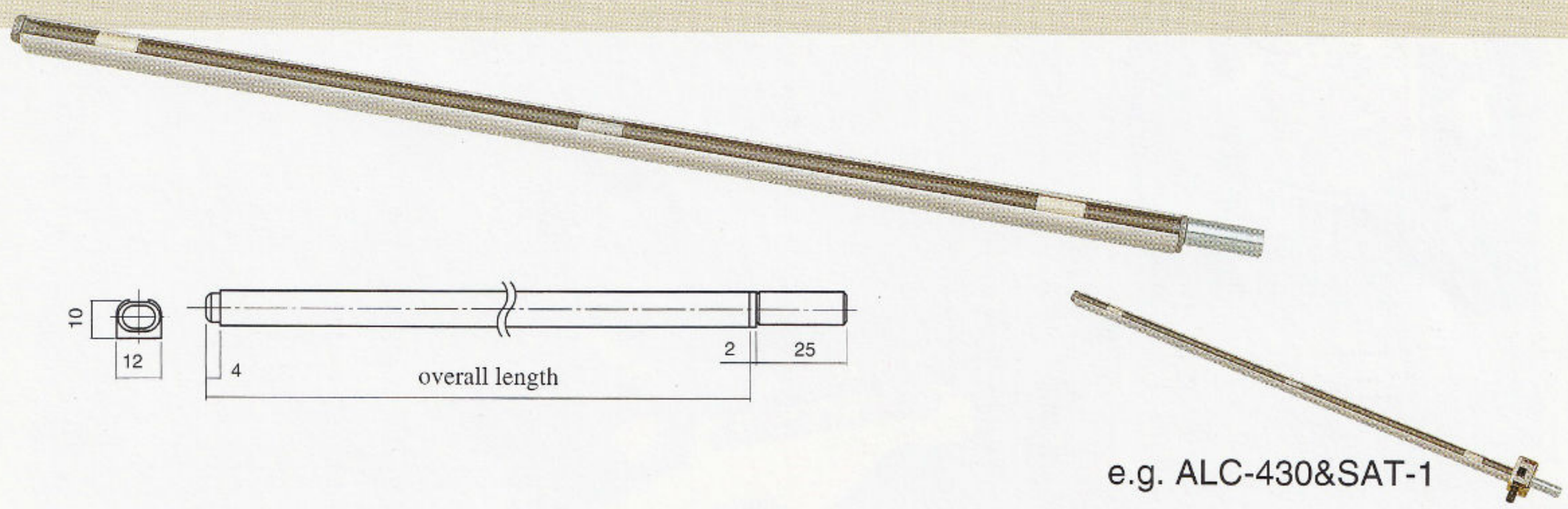

To enable you to get the desired neck condition, it is recommendable to use GOTOH truss rods in combination with SAT-1 or SAT-2.

H.A.P. SYSTEM MACHINE HEADS

Worldwide patent pending

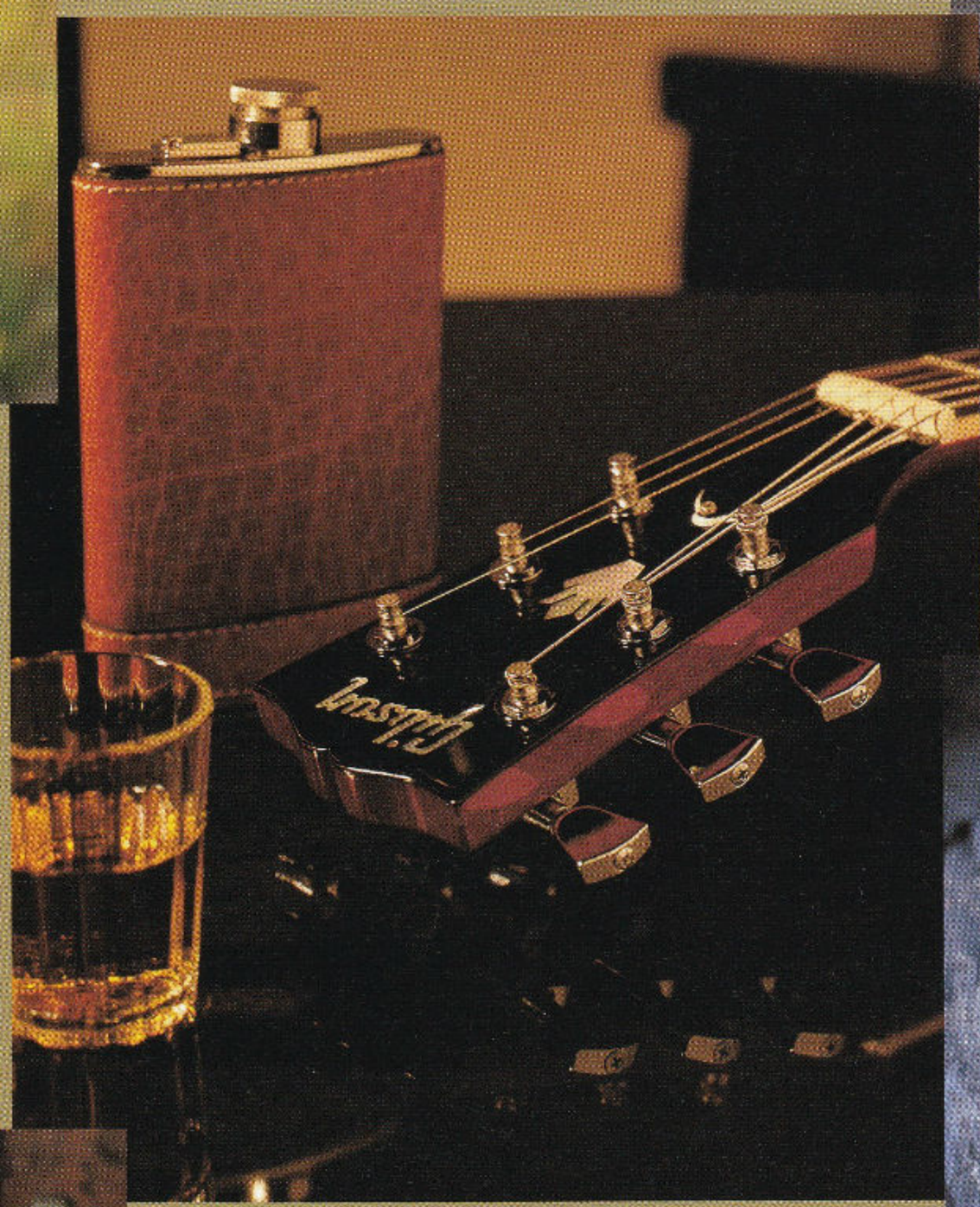

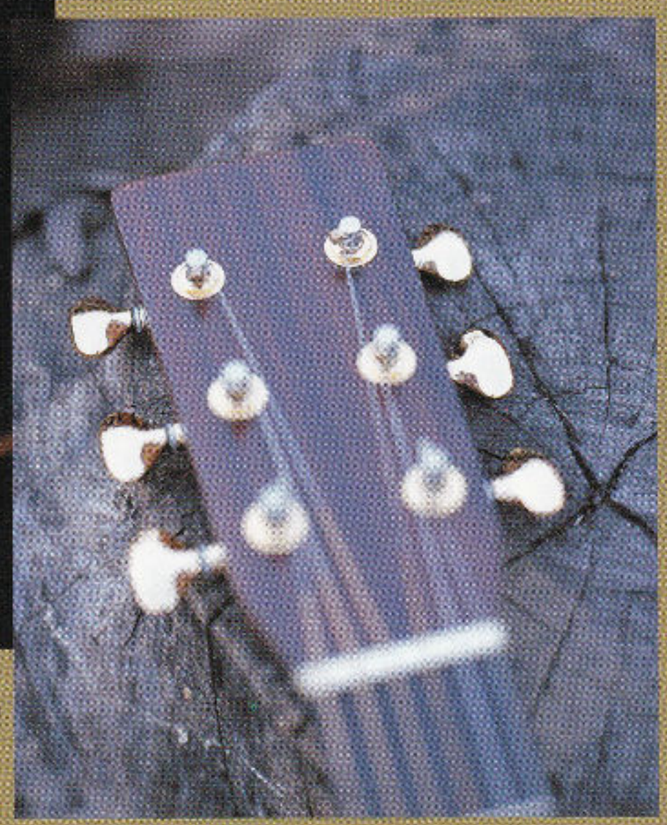

A Tuning Keys for the 21st Century

Acheiving the optimum string "Break Angle" over a guitar top nut is one of the most crucial elements of an instruments sound, feel and function. Too shallow an angle will result in a loss of sustain due to strings vibrating in and behind the nut itself, this will also cause what is referred to as "Nut Buzz". A more acute angle can do wonders for sound and sustain but will cause all kinds of tuning problems. Bending strings, as well as using a vibrato system will result in tuning instability due to excessive friction in the nut.

A worlds first from Gotoh!

"GOTOH H.A.P. SYSTEM" tuning keys allow you to adjust the height of each string post relative to the face of the headstock enabling you to choose the optimum "Break Angle" of each string on the nut. So whatever type of headstock your guitar has you can now "Dial" in the exact tension to suit your playing style! Available now– "The Ultimate Tuning Key".

For Bass Guitar

Utilizing Height Adjustable Posts on Bass tuning keys [model H.A.P. Bass] will be a great benefit to all bass players. String angle over nut is as important on a bass as on guitar, especially multi-string designs utilizing low "B". Many bass players adjust this string angle by increasing string winds around posts. This is no longer necessary as minimum string winds can be used allowing optimum string tension to be achieved by adjusting post height.

GB70 H.A.P.

Finishes /C.GG.B

Mission 1:20

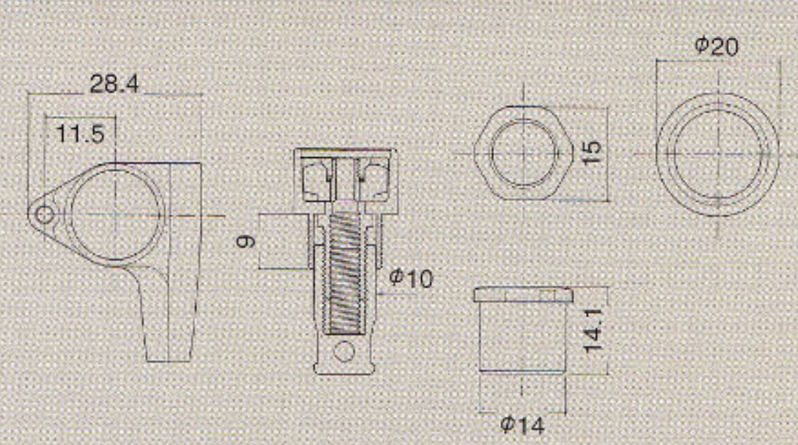

GB72 H.A.P.

Finishes /C.GG.B

Mission 1:20

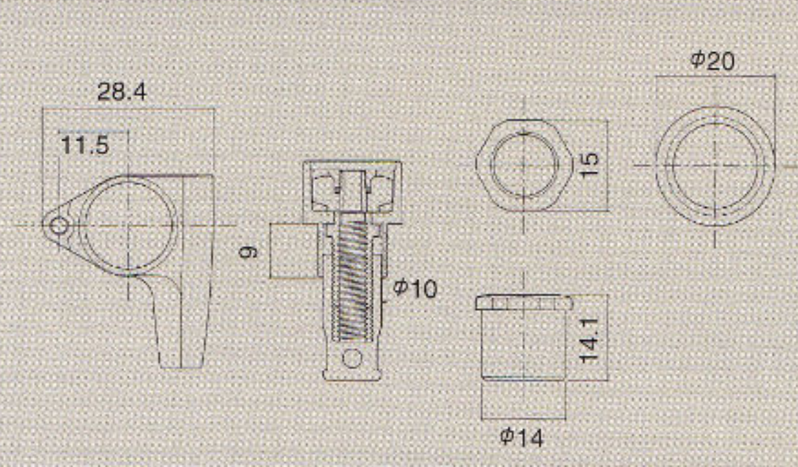

GB73 H.A.P.

Finishes /C.GG.B

Mission 1:20

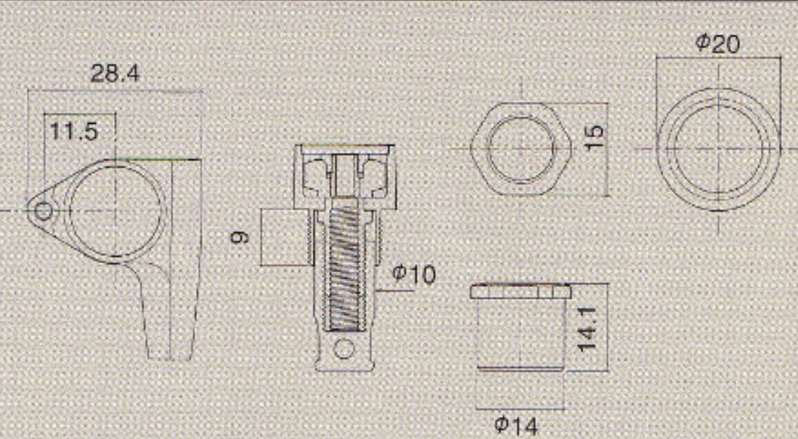

GBS510 H.A.P.

Finishes /C.GG.B

Mission 1:22

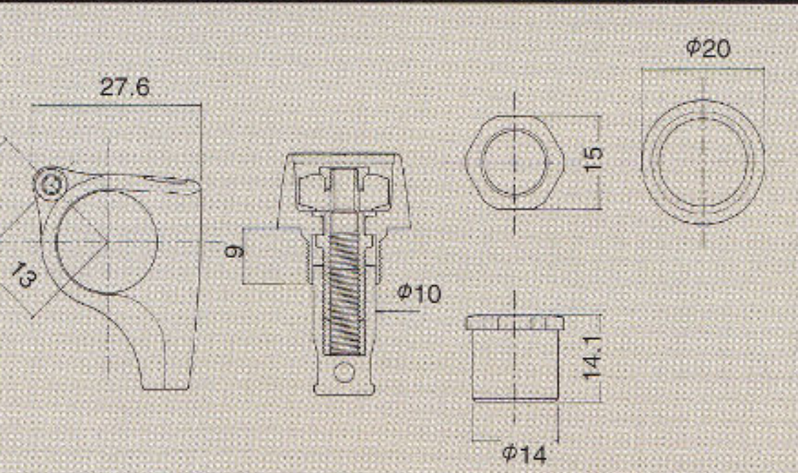

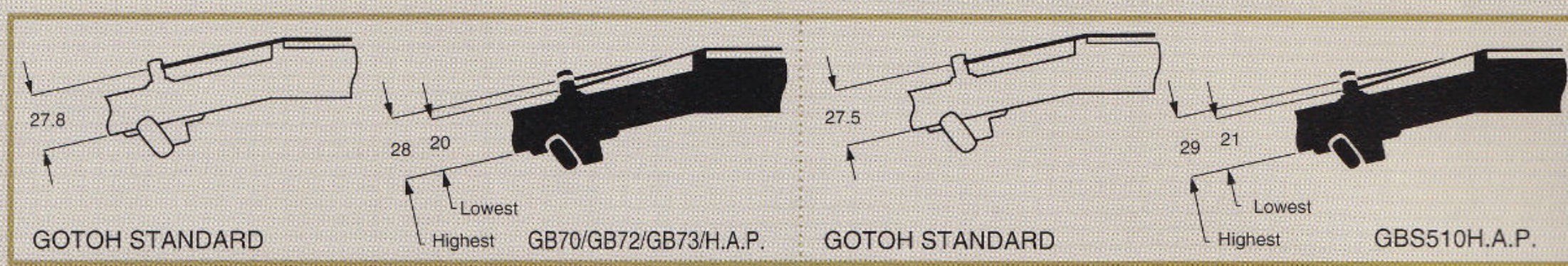

Finishes : N-Nickel C-Chrome GG-Gold B-Black Chrome

For Guitar

Height Adjustable Post [model H.A.P.] is designed for use on flat style headstocks. The posts are adjustable in height to position strings closer to headstock face. This is especially useful on high "E", "B" and "G" strings where it is desirable to remove string trees (eliminating this source of friction) giving greater tuning stability when bending strings or using a vibrato device but retaining good open string sound.

SGS510 H.A.P.

Finishes/C.GG.B
e.g./SGS510-L5 H.A.P.
SGS510-S5-L H.A.P.

Mission 1:15

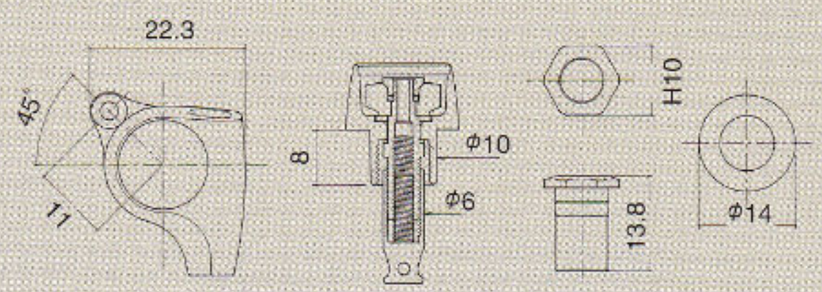

BUTTON OPTION (SGS510/SGL510)

S5

L5

P1

P2

EN20

S5

SGS H.A.P.

Finishes/C.GG.B
e.g./SGS-EN20 H.A.P.
SGS-07-R H.A.P.

Mission 1:15

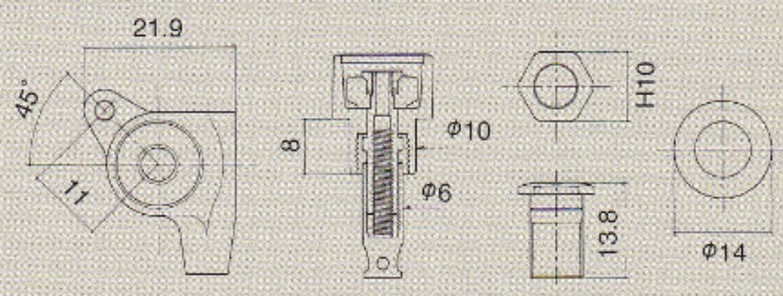

SD91 H.A.P.

Finishes /N.GG.B
e.g./SD91-05M-L H.A.P.
SD91-05MA-R H.A.P.

Mission 1:15

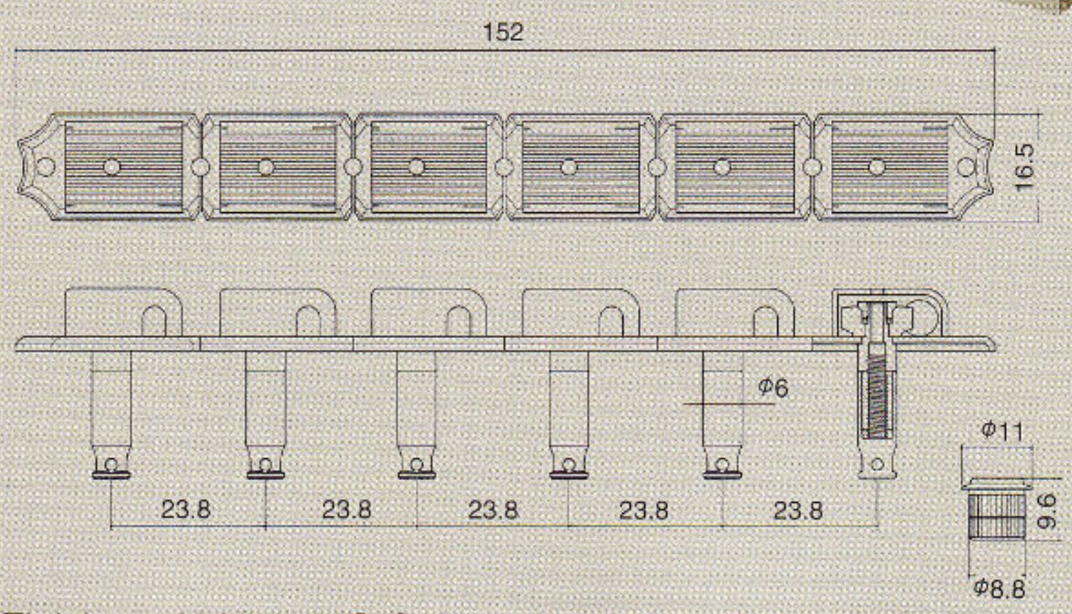

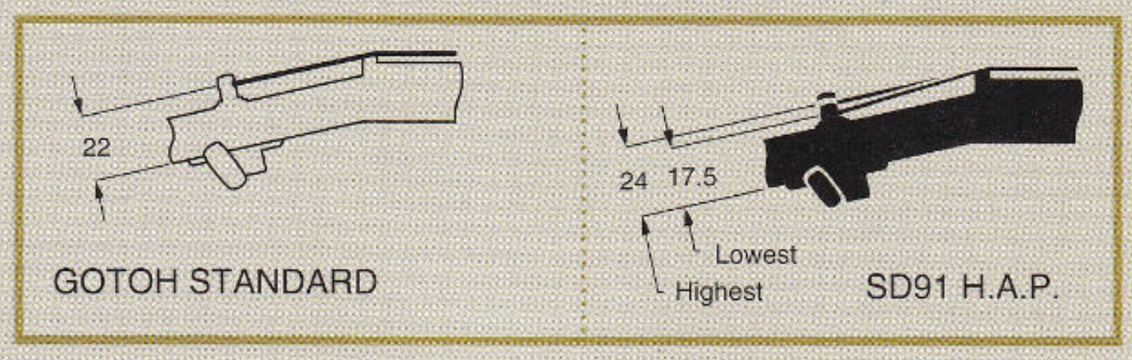

Finishes : N-Nickel C-Chrome GG-Gold B-Black Chrome

SGL510 H.A.P.

Finishes/C.GG.B
e.g./SGL510-P1 H.A.P.
SGL510-EN20 H.A.P.

Mission 1:18

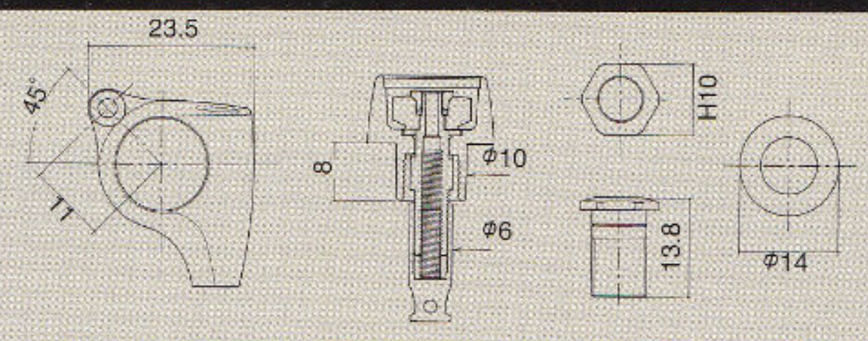

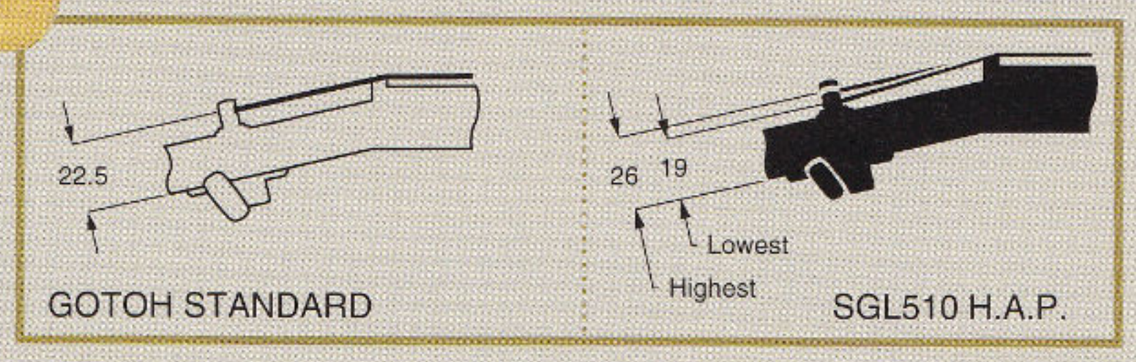

SGL H.A.P.

Finishes/C.GG.B
e.g./SGL-P1 H.A.P.
SGL-EN20 H.A.P.

Mission 1:18

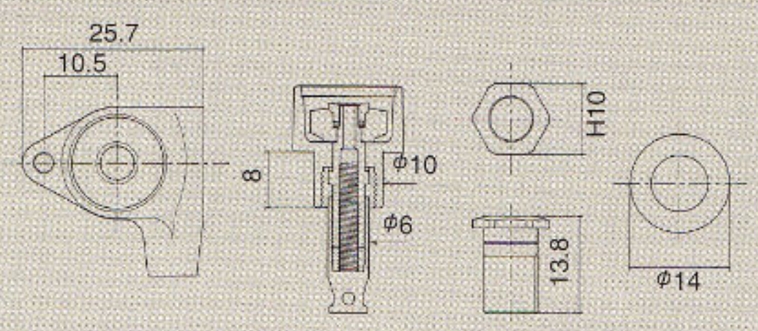

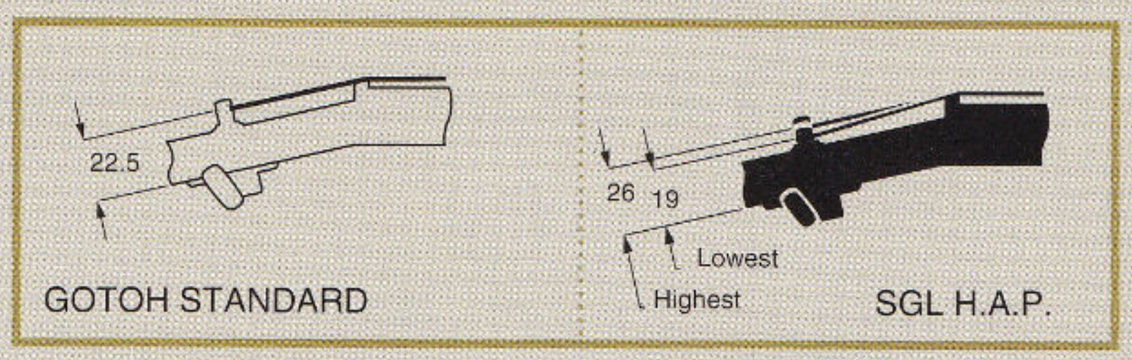

BUTTON OPTION (SGS/SGL)

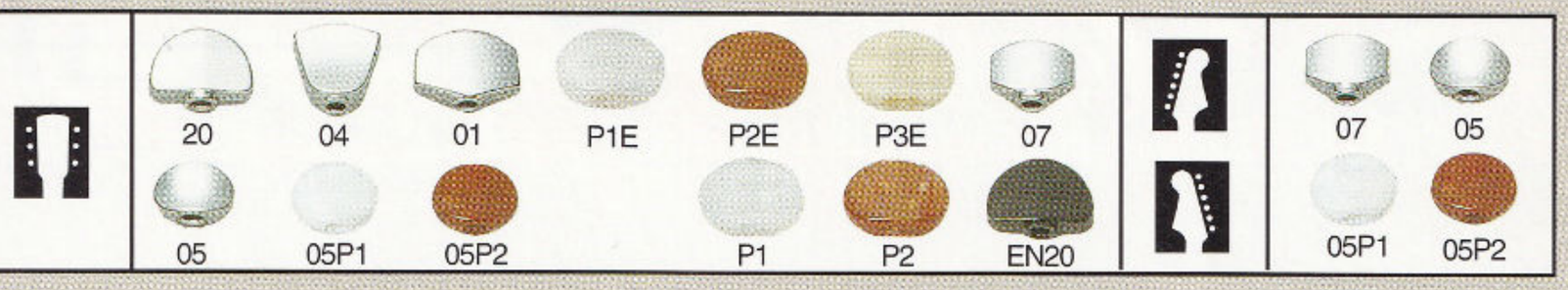

SD90 H.A.P.

Finishes /N.GG.B
e.g./SD90-SL H.A.P.
SD90-06M H.A.P.

Mission 1:15

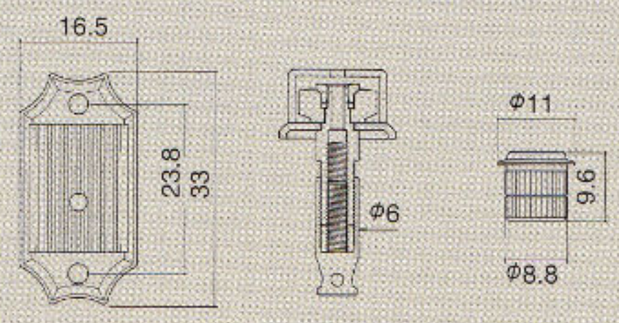

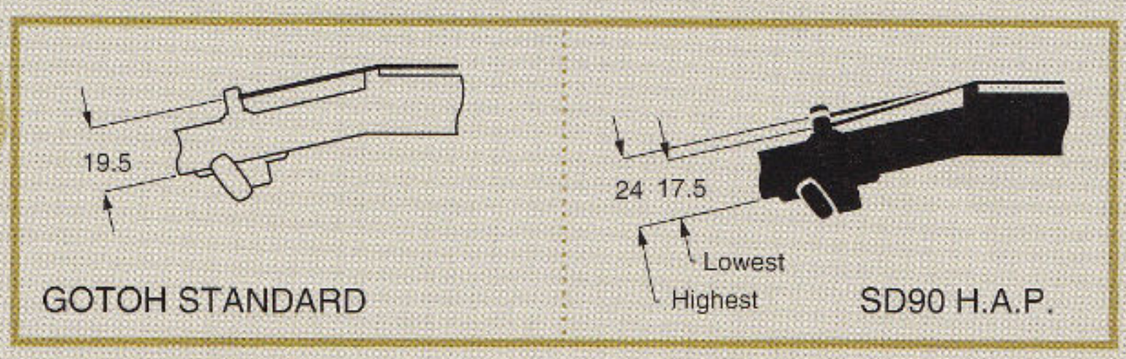

BUTTON OPTION (SD90/SD91)

For Guitar

Height Adjustable Post [model H.A.P.A.] is designed for use on angled back headstocks. Working in the reverse of H.A.P. it is sometimes desirable to reduce string tension over the nut. This will enable easier string bends and improved tuning stability. By raising the strings posts it is possible to reduce string angle over the nut but still retain good open string sound. This is particulary usefull on Three-A-Side headstocks especially dreadnought/acoustic guitars.

SGS510 H.A.P.A.

Finishes /C.GG.B
e.g. /SGS510-S5 H.A.P.A.
SGS510-L5 H.A.P.A.

Mission 1:15

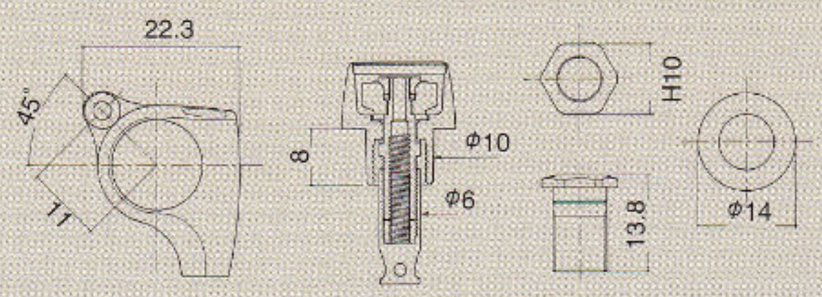

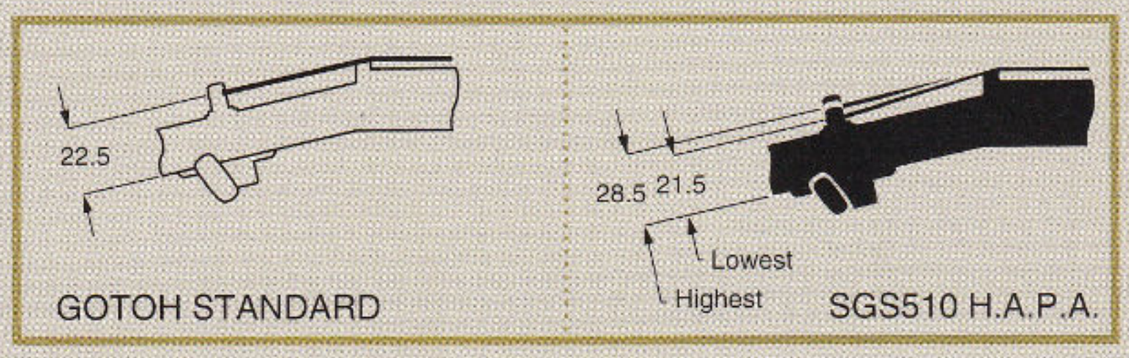

BUTTON OPTION (SGS510/SGL510)

SGL510 H.A.P.A.

Finishes/C.GG.B
e.g./SGL510-P1 H.A.P.A.
SGL510-EN20 H.A.P.A.

Mission 1:18

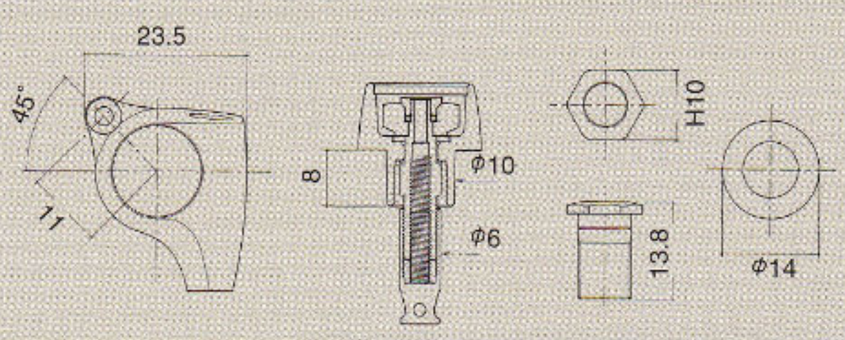

SGL H.A.P.A.

Finishes /C.GG.B
e.g. /SGL-01 H.A.P.A.
SGL-P2E H.A.P.A.

Mission 1:18

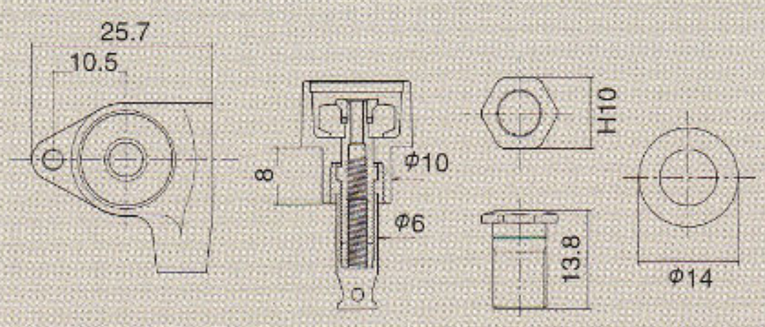

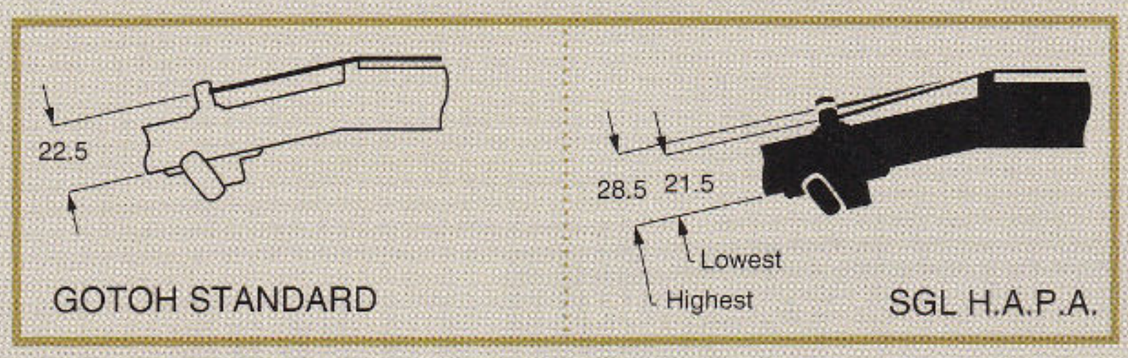

Finishes : N-Nickel C-Chrome GG-Gold B-Black Chrome

H.A.P.P. SYSTEM MACHINE HEADS

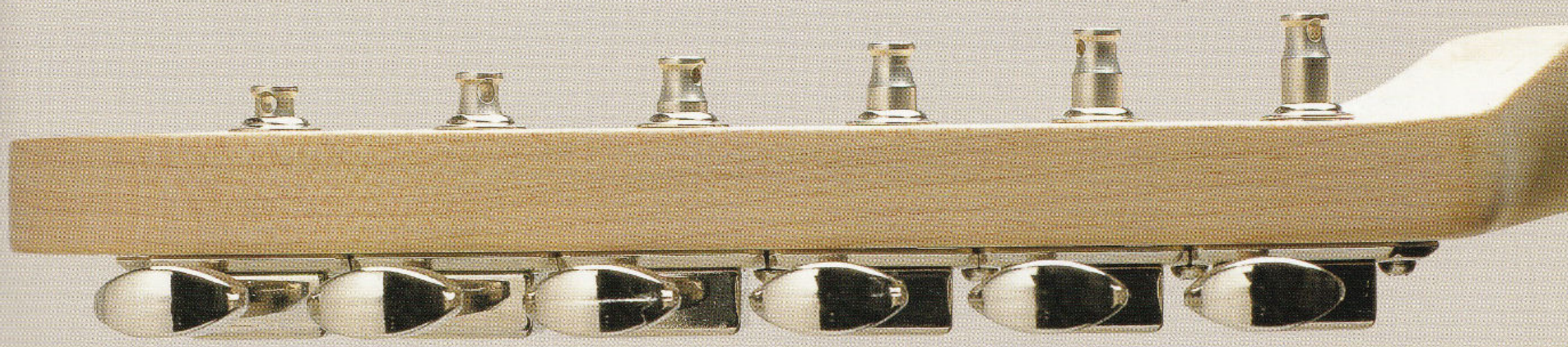

This illustration is an example for SD91 H.A.P. set-up in page 25.

SGS H.A.P.A.

Finishes/C.GG.B
e.g./SGS-07 H.A.P.A.
SGS-04 H.A.P.A.

Mission 1:15

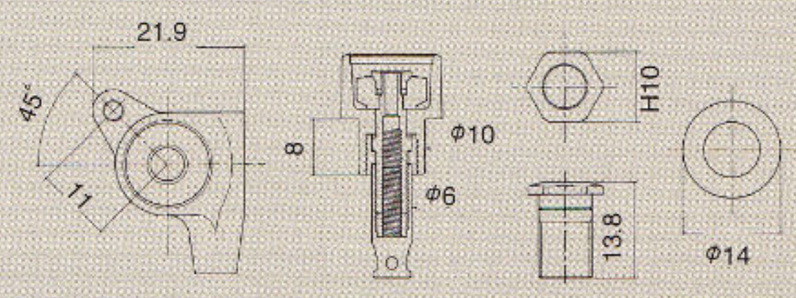

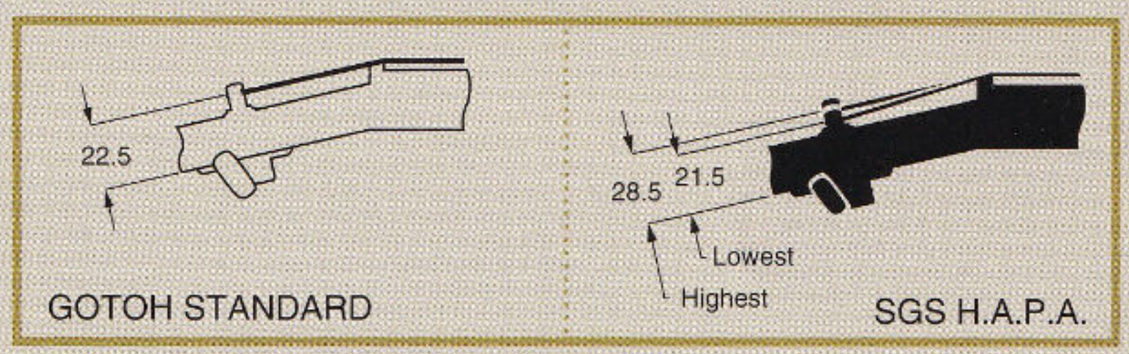

BUTTON OPTION (SGS/SGL)

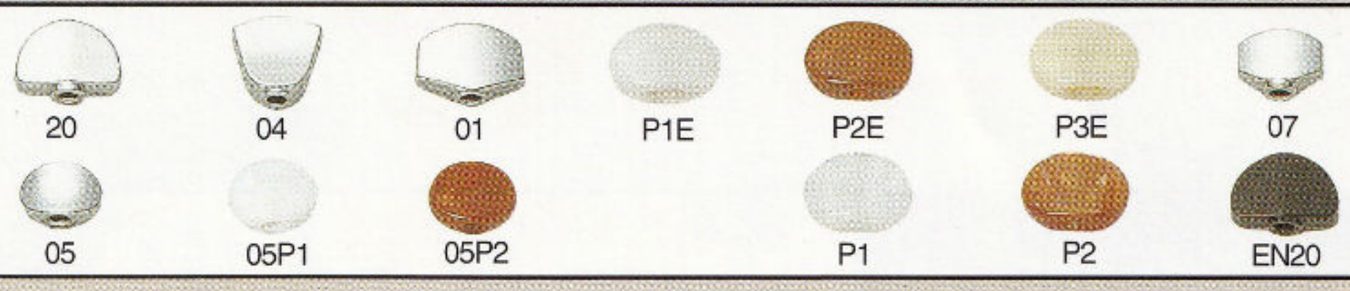

SD90 H.A.P.A.

Finishes/N.GG.B
e.g./SD90-05M H.A.P.A
SD90-05MP2 H.A.P.A

Mission 1:15

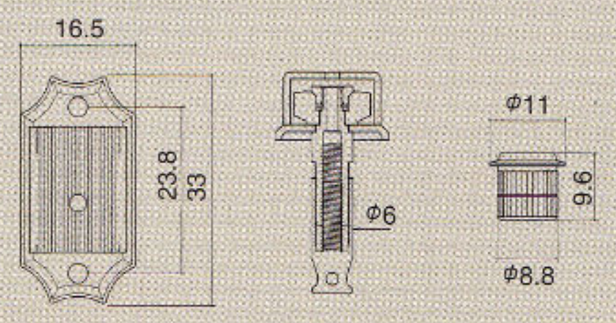

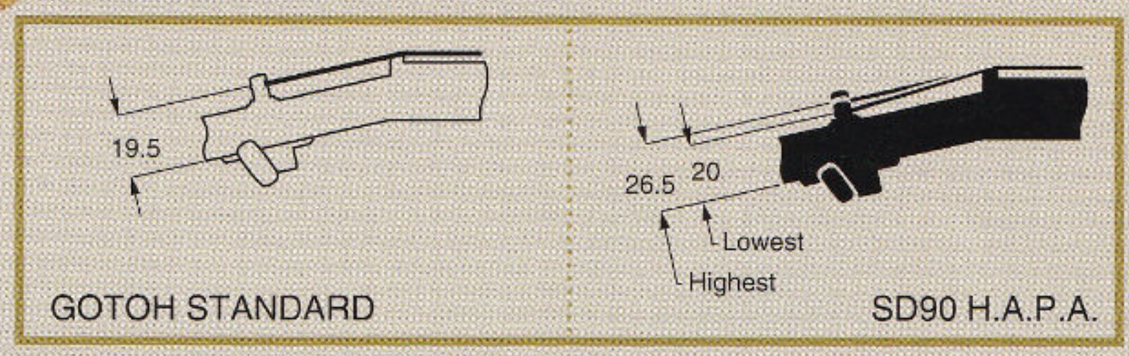

BUTTON OPTION (SD90)

For Guitar

Combining all the features of Height Adjustable Posts with Gotoh's unique "Magnum Lock" [model H.A.P.M.] is the most significant advance in tuning key design ever ! Eliminating the string windings from the tuning key posts enables the strings to return to the same position even after aggresive use of a vibrato. This feature is assisted even further by being able to achieve minimum friction at the nut. H.A.P.M. tuning keys will give ultimate tuning stability for non-locking vibrato bridges.

SGL510 H.A.P.M.

Finishes/C.GG.B
e.g./SGL510-L5 H.A.P.M.
SGL510-P2 H.A.P.M.

Mission 1:18

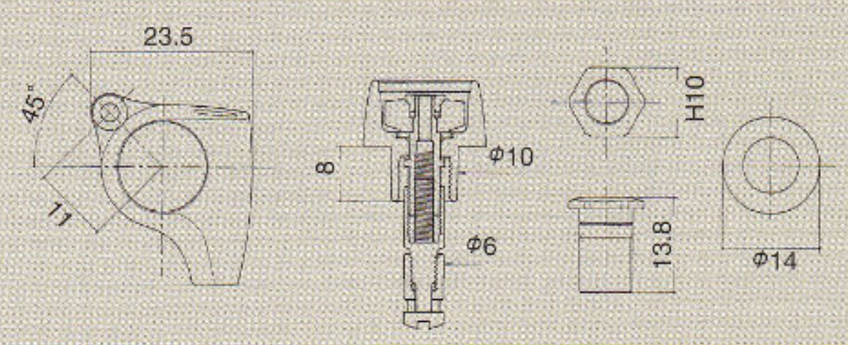

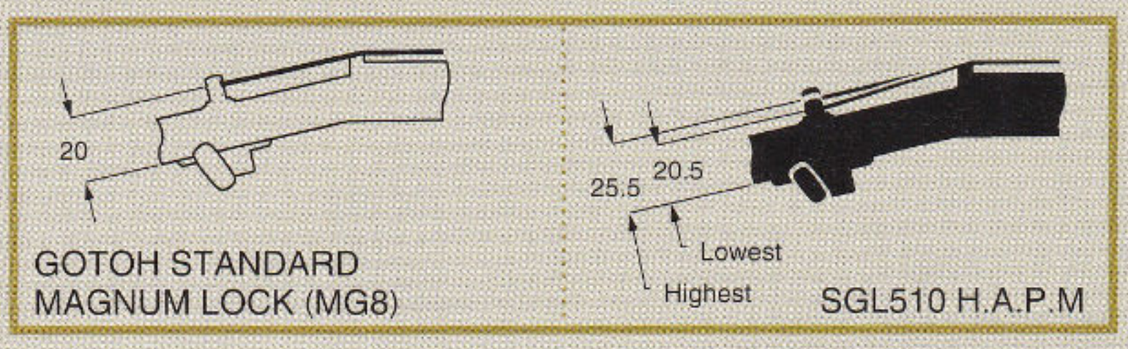

SGL H.A.P.M.

Finishes/C.GG.B
e.g./SGL-20 H.A.P.M.
SGL-P3E H.A.P.M.

Mission 1:18

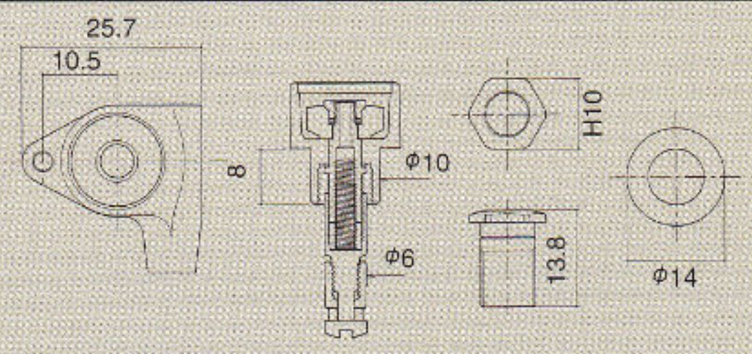

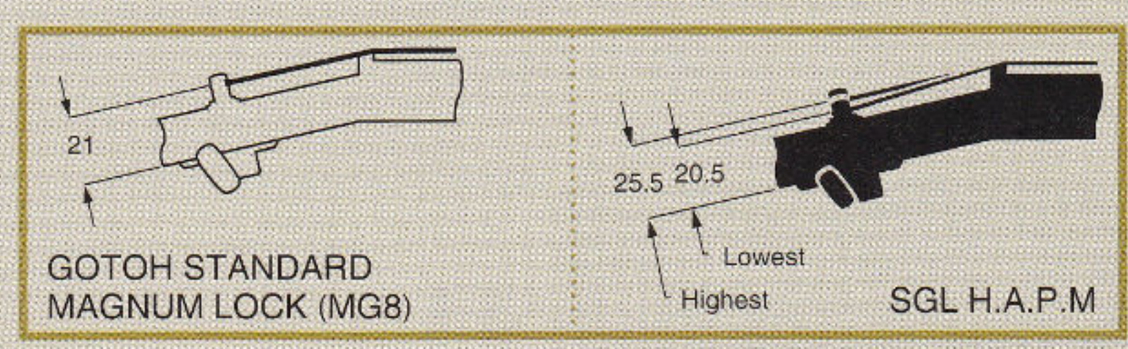

BUTTON OPTION (SG Series)

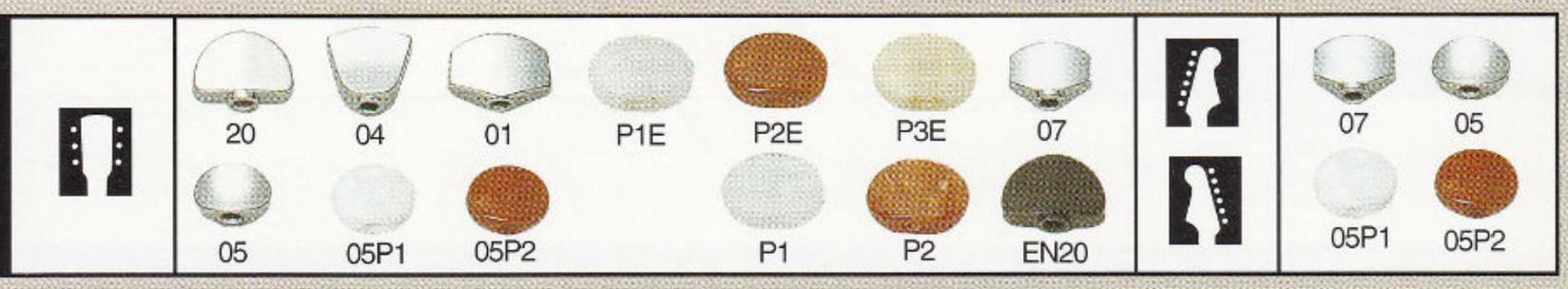

SD90 H.A.P.M.

Finishes /N.GG.B
e.g. /SD90-05M H.A.P.M.
SD90-05MP2 H.A.P.M.

Mission 1:15

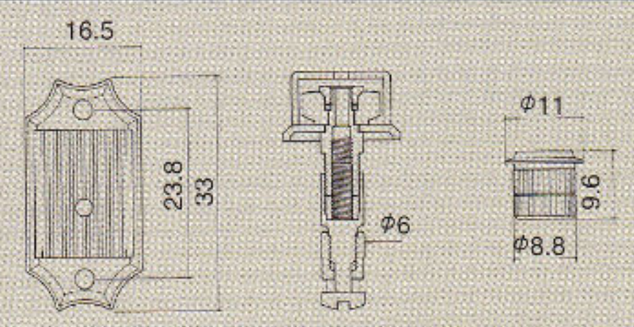

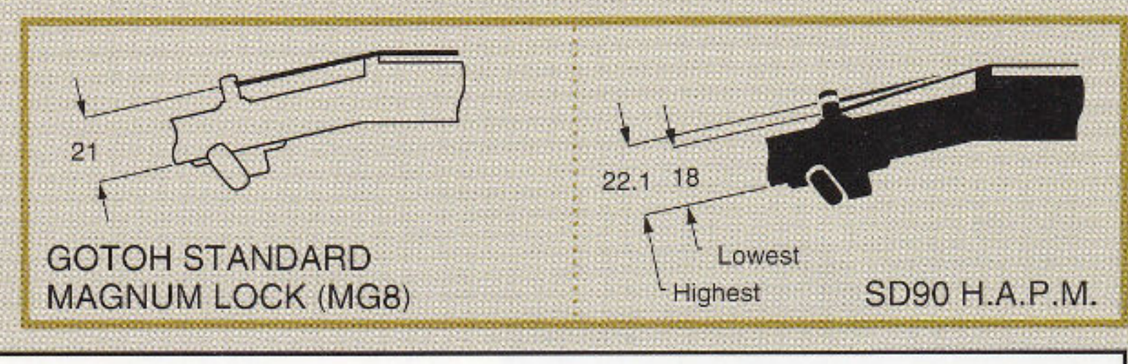

BUTTON OPTION (SD90/SD91)

Finishes : N-Nickel C-Chrome GG-Gold B-Black Chrome

SGS510 H.A.P.M.

Finishes /C.GG.B
e.g./ SGS510-S5-L H.A.P.M.
SGS510-S5-R H.A.P.M.

Mission 1:15

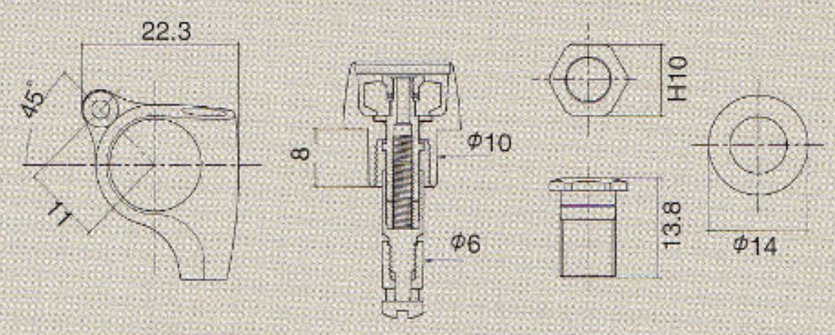

BUTTON OPTION (SGS510/SGL510)

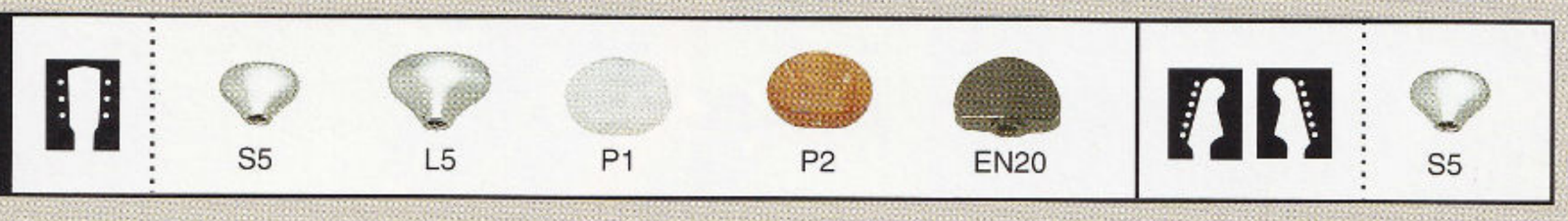

SGS H.A.P.M.

Finishes/C.GG.B
e.g./SGS-05-R H.A.P.M.
SGS-01 H.A.P.M.

Mission 1:15

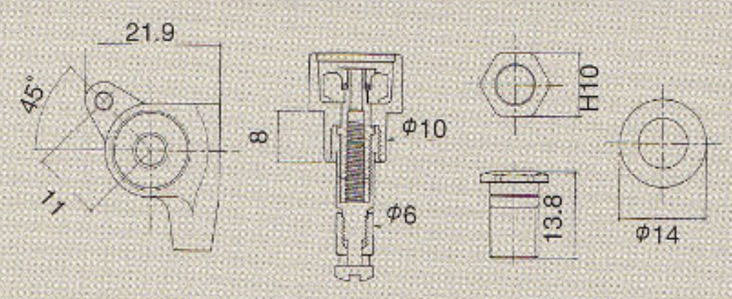

SD91 H.A.P.M.

Finishes/N.GG.B
e.g./SD91-06M-L H.A.P.M.
SD91-05M-R H.A.P.M.

Mission 1:15

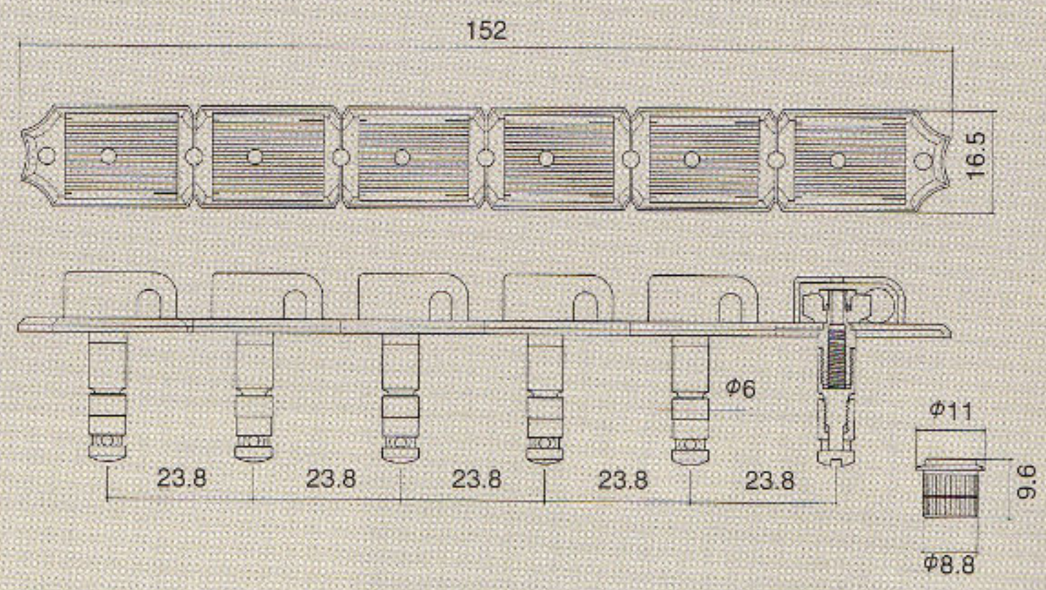

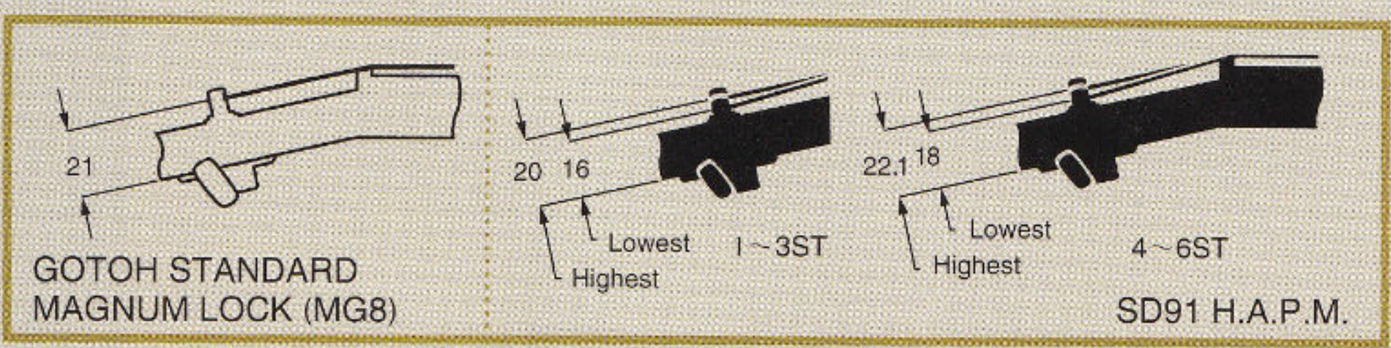

GOTOH®

Address : 3040 Miyako-cho,Isesaki,
Gunma, 372-0801 Japan
TEL : 0270-25-3608
FAX : 0270-23-8432

GOTOH® GUITAR HARDWARE and MACHINE HEADS
are sold and serviced by

Specifications subject to change for further quality improvement without notice.