GOTOH®

Parts Collection

Guitar, Bass & String Instruments PARTS

English Edition 2016 ～

GOTOH®

Technical Innovation

LUBRI-COAT ™

Lubri-Coat* : creating the machine head of the future.

The application of Lubri-Coat (solid lubricating layer) to the worm gear, establishes better contact between the worm and the gear wheel. As a result, backlash is minimized when tuning. In addition, the synergistic effect derived from GOTOH's original degrade-resistant lubricating oil, means that machine heads can be more durable and maintain accuracy for longer.

＊ Lubri-Coat PAT. (PCT)

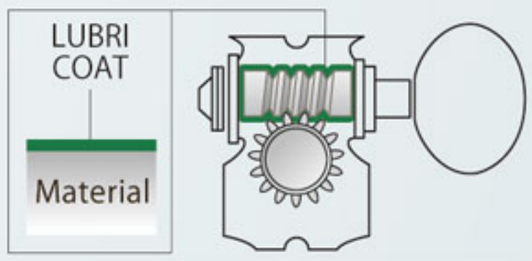

LUBRI-PLATE ™

The enhanced feeling and micro precision of Lubri-Plate *1

With "Lubri-Plate" Teflon compound (lubricating compound coating) on the worm and the wheel, you get smooth gear meshing and improved durability. With the additional use of the G.S.P.*2, you can experience the ultimate feeling.

＊1. Lubri-Plate PAT.(PCT)　　＊2. G.S.P GOTOH original non-oil based lubricant

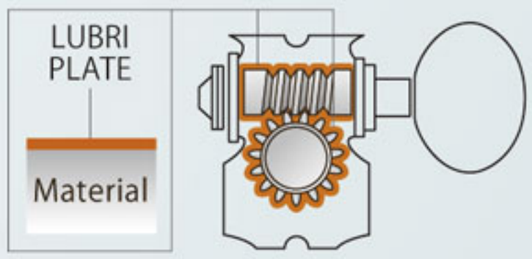

ROCK-SOLID™ STRING POST

The ultimate post : stays solid, even during arming or bending play.

Unwanted rattle from gears, rolling posts and body assembly are eliminated. Thanks to the incorporation of special elastic components on the main parts, transmission of string vibration to the instrument is maximized. Naturally, the results are greatest during arming and bending play, here high-technology takes machine heads to the ultimate.

＊ Rock-solid String post PAT. (PCT)

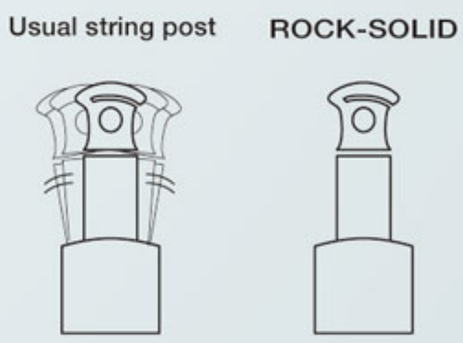

X-FINISH

X-Finish
The ultimate finish,
repels all water and dirt
and gives inimitable look.

X-Finish employs Lubri-Plate as an exterior coating. This high quality finish which produces our unique color, provides a fusion of extreme water-repelling properties with superb lubrication. Up until now, coatings became oxidized with the passage of time, by sweat and lubrication oil building-up, which then attracts dust and dirt: resulting in corrosion. X-finish repels both water and grime, protecting moving parts from rust and dirt.
The end result is a major step forward in durability and functionality for the rotative portion. The color may change depending on conditions of use, but there's no negative effect on performance. Machine heads treated with X-Finish and Lubri-Plate deliver unsurpassed tuning-response and superior durability.

Gotohs "X-finish" combined with "Lubri-Plate" is designed to reduce poor performance of the worm gears by lubrication with oil or grease to a minimum keeping your instrument

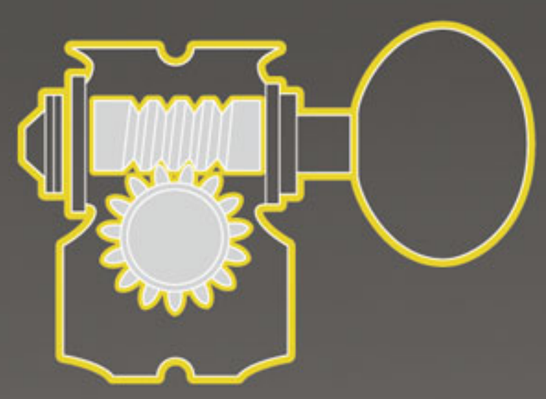

X-Series gears finished in "X" FINISH

- **Guitar Machine Heads**
  SG510 Series・SX510 Series・SE700 Series・SD510 Series
- **Classic Guitar Machine Heads**
  35G510AM・35G510MF・35G510S
- **Bass Guitar Machine Heads**
  RES-O-LITE Series
  GB350・GB640・GBR640・GB528・GB528S
- **Tremolo Units**
  EV510T・EV510TS
- **Guitar Bridges**
  510FA・510FB・510UB
- **Bass Bridges**
  J510SJ/BO・404SJ/BO・303SJ/BO

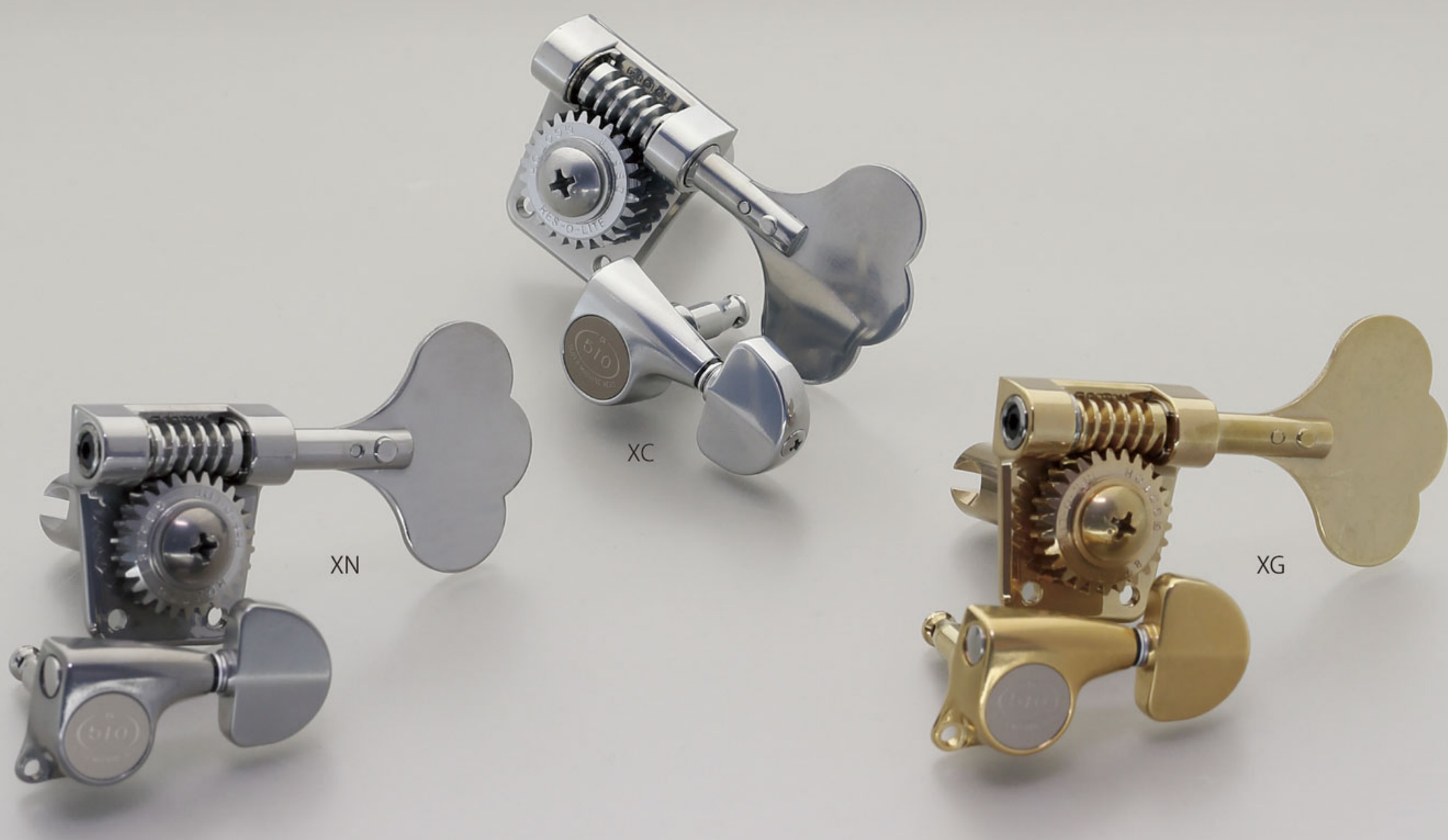

XN : X-Nickel　XC : X-Chrome　XG : X-Gold

GOTOH® STRING POST

The SG-series and SD-series of GOTOH machine heads, offer a variety of posts: Standard, Magnum Lock-Trad (MG-T), Magnum Lock (MG), and H.A.P / H.A.P-M with the ability to adjust the height of the post. By installing the "Rock-Solid String Post" (not available for all models) which eliminates unwanted rattle of the post, keeps the tune back from arming and bending play. GOTOH's state the art technology, developmental prowess and technical skill have won the confidence of custom builders around the world.

*Addtional improvement : “Friction-Free Ring” was added to the standard post of SG510 Series.

MAGNUM

MG [MAGNUM LOCK®]

The GOTOH Magnum Lock uses string tuning tension for its locking mechanism. Unlike other regular locking pegs, it doesn't overly press the strings, which means there's no fear of strings breaking due to excessive lock. This system avoids the out-of-tune caused by slack of string wounding on string post, once tremolo arm down play. On the New Magnum Lock the string holes for the 1st, 2nd and 3rd strings, now have a more suitable diameter (ϕ1.2) thus realizing a more positive string-lock, and improved tuning stability than ever before.

Magnum Lock
#1～#3 ϕ1.2

Magnum Lock
#4～#6 ϕ1.8

Magnum Lock String post

2x SPEED MAGNUM

DSL [DOUBLE SPEED MAGNUM LOCK®] [DOUBLE SPEED H.A.P.-MAGNUM LOCK®]

The MG and H.A.P.M have evolved for the SG510 series and SD510 series. Moving the lock-nut is now twice as fast though they still retaining their original style and functionality. Locking a string down now takes half the time it does when compared with the standard MG.

* MG and H.A.P.M come equipped with double-speed lock on all models in the SG510 series and SD510 series.

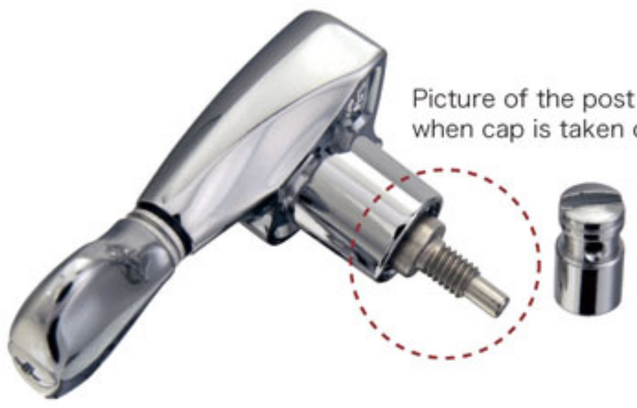

Picture of the post when cap is taken off.

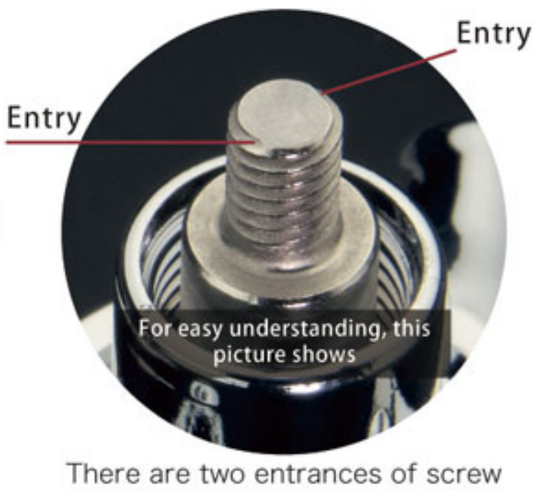

There are two entrances of screw and the screw spiral is double threaded.

MAGNUM TRAD

MG-T [MAGNUM LOCK® TRAD]

Gotoh is pleased to announce a new thumbscrew-style locking tuner.
Much requested and long awaited, the "Magnum Lock-Trad" combines classic functionality with Gotoh technology.

Magnum Lock-TRAD String post

SG510 Series
Standard String Post

SG Series
Standard String Post

H.A.P® [Height Adjustable Post]

With the H.A.P system, it's ability to adjust post height, means that the pressure which the nut puts on the string can be adjusted on each individual string, so obtaining the ideal amount of string oscillation. This ability to control string sustain and touch tension allows the musician to configure a set-up which perfectly for them. Thanks to its ability to set the post at a lower position compared to a standard post, H.A.P is particularly suited to straight neck type instruments, which have only a slight head angle.

H.A.P String Post

H.A.P®-M

The H.A.P-M system combines the H.A.P system with the Magnum Lock. H.A.P-M already has an established reputation, but now whilst retaining the original functionality, we've altered the string holes for the 1st, 2nd and 3rd strings to a better diameter (ϕ1.2) so a more positive string lock is possible. On neck types with only a slight head angle, it is possible to hold the string at just the right angle by adjusting the post of each string to a lower setting. In addition, it is possible to remove the string retainer, thus doing away with excessive frictional resistance and providing improved tuning stability at the same time.

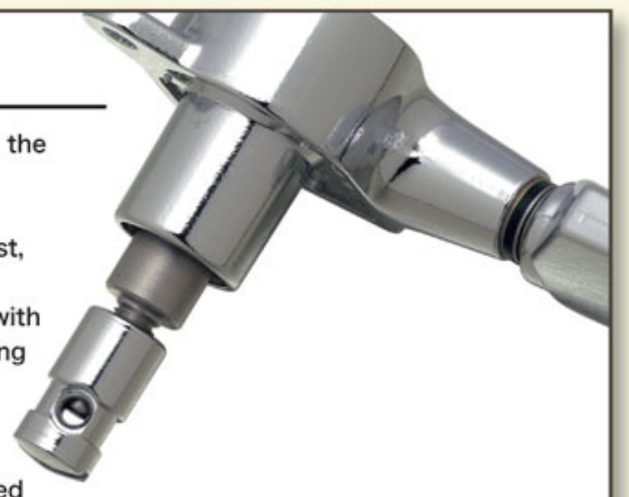
H.A.P-M String Post

Contents

1 **Technical Innovation**
Lubri-Coat / Lubri-Plate / Rock Solid

2 **X-Finish**

3 - 4 **String Post Description**
Standard / H.A.P / H.A.P-M
Magnum Lock / Magnum Lock-Trad

5 - 8 **Guitar Machine Heads**
SG510 Series / SG Series

9 - 10 **Guitar Machine Heads**
SX510 Series / SE Series

11 - 12 **Guitar Machine Heads**
SD510 Series / SD Series
C・A・R・D

13 - 14 SD90 / SD91 MG–T
Planetary Banjo Tuner

15 - 16 **Ukulele pegs**
Planetary Ukulele Tuner

17 - 19 **Classic Guitar Machine Heads**
35G510 Series / 35G Series

20 **Mandolin Machine Heads**

21 - 23 **Bass Machine Heads**
RES-O-LITE Series / Regular Series

24 **STEALTH-KEY**

25 - 26 **Tremolo Units**
510 Series

27 **Tremolo Units & Lock Nuts**

28 **Wilkinson by GOTOH**

29 - 30 **Guitar Bridges & Tailpieces**
510 Series & Regular Series

31 - 32 **Guitar Bridges & Tailpieces**
Regular Series & Titanium Saddle Series

33 - 34 **Guitar Bridges**
"In-Tune" Saddle Series

35 - 36 **Bass Bridges**
Multi-Tonal Series

37 **Bass Bridges**
510 Series / Regular Series

38 **Accessories** / Arms

39 - 40 Saddle Sets / Strap Pin / Free Lock
String Bushing / Jack Cover
Neck Joint Plate

41 - 42 Dome Knob / Control Panel / Tension Bar
String Retainer / Battery Box / Wrench Holder
Spring Holder / Power Spring / Spring

43 - 44 **Luxury Mode** / 510 Series
SUPREME GLYPTOGRAPHY

45 - 46 **RELIC Series**

Always follow the instructions in the instruction manual / leaflet.

Guitar ▶ L3+R3 L6 for Right Hand R6 for Left Hand
Bass ▶ L2+R2 L4 for Right Hand R4 for Left Hand

SG510 Series

This is a super tuner recognized as such around the world.

They use a 1:21 gear ratio: a world first. The SG510 series has evolved through improvement without compromise at any stage and come equipped with a considerable application of high-technology as standard. With the improvement of precision fitting gears, marvelous touch on playing---they have gained a considerable reputation and are trusted as the No.1 machine head by many musicians all over the world.

SGS510

Head Type	
String Post	STANDARD. MG. HAP. HAPM. MG-T
Finishes	C. GG. B. CK. XN. XC. XG
Gear ratio	1 : 15
e.g.	SGS510-S5-L SGS510-EN07-R-HAP SGS510-P8

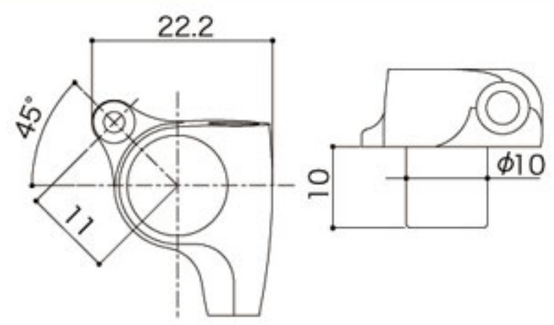

SGL510

Head Type	
String Post	STANDARD. MG. HAP. HAPM. MG-T
Finishes	C. GG. B. CK. XN. XC. XG
Gear ratio	1 : 18
e.g.	SGL510-P1-HAP SGL510-L5-MG-T SGL510-A01

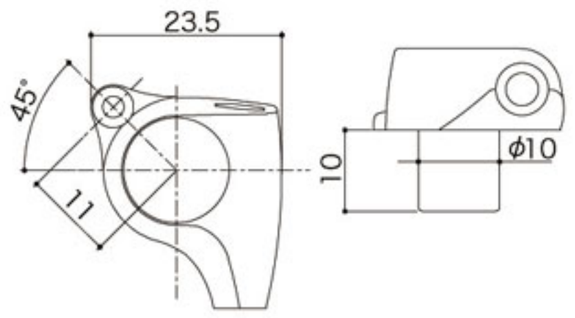

SGV510

Head Type	
String Post	STANDARD. MG. HAP. HAPM. MG-T
Finishes	C. GG. B. CK. XN. XC. XG
Gear ratio	1 : 18
e.g.	SGV510-A20-HAPM SGV510-M07-MG SGV510-P1

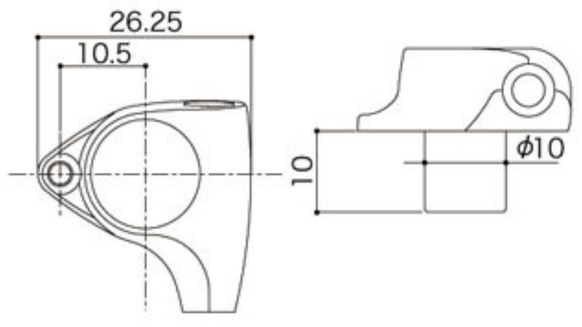

Finishes : C (Chrome), **GG** (Gold), **B** (Black Chrome), **CK** (Cosmo Black), **XN** (X-Nickel), **XC** (X-Chrome), **XG** (X-Gold)

SGS510Z

Head Type	
String Post	STANDARD. MG. HAP. HAPM. MG-T
Finishes	C. GG. B. CK. XN. XC. XG
Gear ratio	1 : 18
e.g.	SGS510Z-S5-L-MG-T SGS510Z-B07-R-HAP SGS510Z-A07

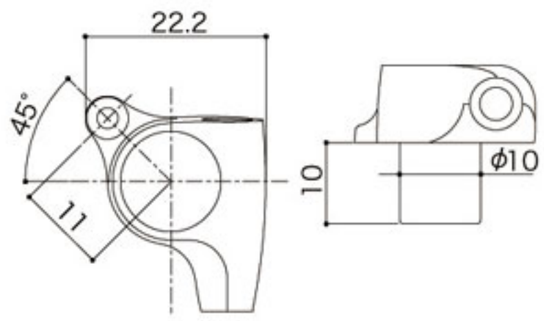

SGL510Z

Head Type	
String Post	STANDARD. MG. HAP. HAPM. MG-T
Finishes	C. GG. B. CK. XN. XC. XG
Gear ratio	1 : 21
e.g.	SGL510Z-L5-MG SGL510Z-EN01-HAP SGL510Z-BL5

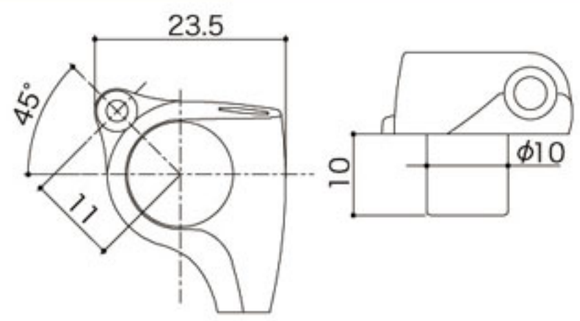

SGV510Z

Head Type	
String Post	STANDARD. MG. HAP. HAPM. MG-T
Finishes	C. GG. B. CK. XN. XC. XG
Gear ratio	1 : 21
e.g.	SGV510Z-ML5-MG-T SGV510Z-P7-HAPM SGV510Z-BS5

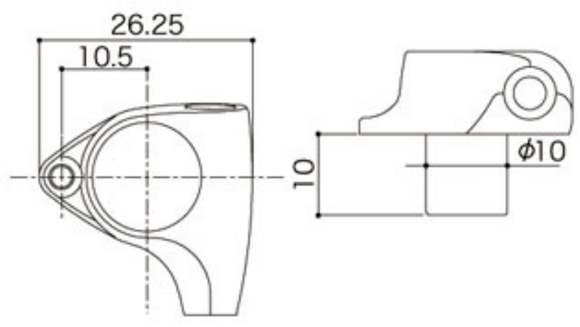

* "Z" of 510Z meant the ultimate and has realized the high gear ratio (SGS510Z is 1:18) of "1:21."

Option

SG510 Series & SG Series

SG510 Series

BUTTON OPTION

Choose the button from listed below when order for machine head is placed. (actual size ratio : about 50%)

Common use for all types.

The button of "Zinc and Aluminum" becomes the same color as body.

S5	A07	BS5	P7	P8	B07	M07	EN07
(Zinc)	(Aluminum)	(Plastic)	(Plastic)	(Plastic)	(Plastic)	(Plastic)	(Wood)

Exclusive use for 3-on-side (L3+R3) * It is unsuitable for "6 inline."

L5	A01	A20	P4B	P4N	P1	P2	BL5	ML5	EN01
(Zinc)	(Aluminum)	(Aluminum)	(Plastic)	(Plastic)	(Plastic)	(Plastic)	(Plastic)	(Plastic)	(Wood)

String post dimension	STANDARD	MG	MG-T			HAP L3+R3	HAP L6 or R6		HAPM L3+R3	HAPM L6 or R6	
			SHORT	LONG	EX-LONG (OPTION)		1ST / 2ST	3ST ~ 6ST		1ST / 2ST	3ST ~ 6ST

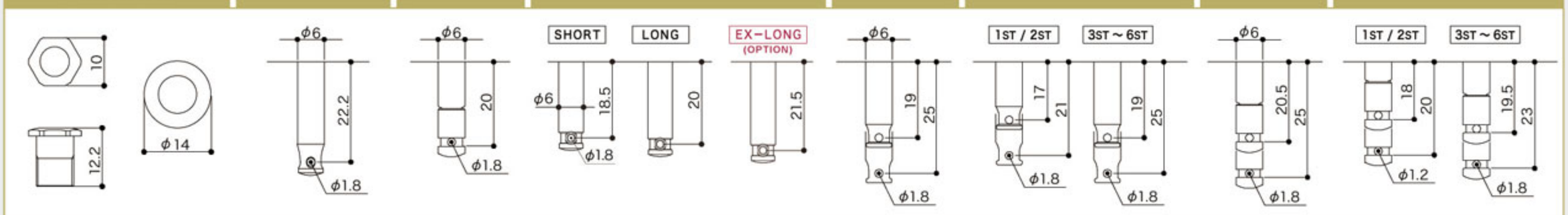

SG510 Series / SG Series in Common

Magnum Lock-Trad STRING POST OPTION

MG-T Standard Set L3+R3

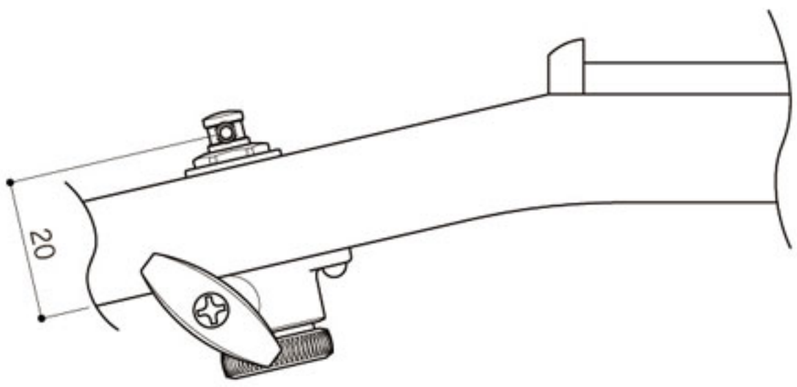

MG-T Standard Set 6-In-Line

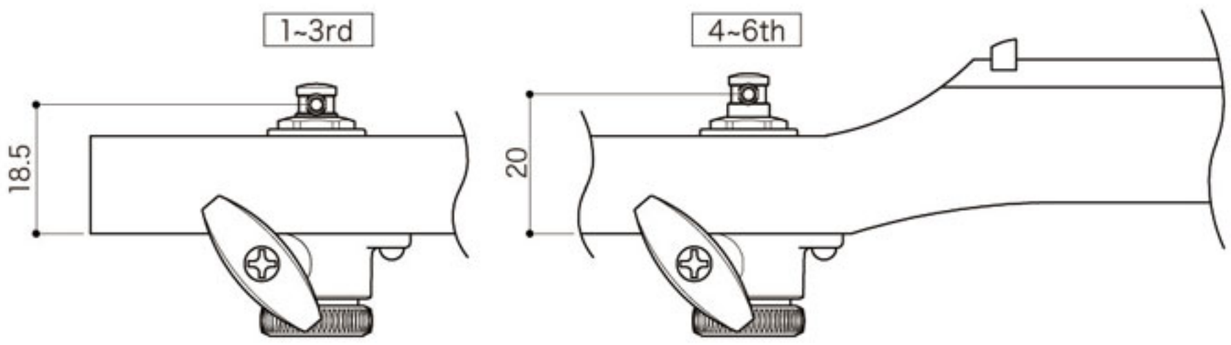

Example of an option set 6-In-Line

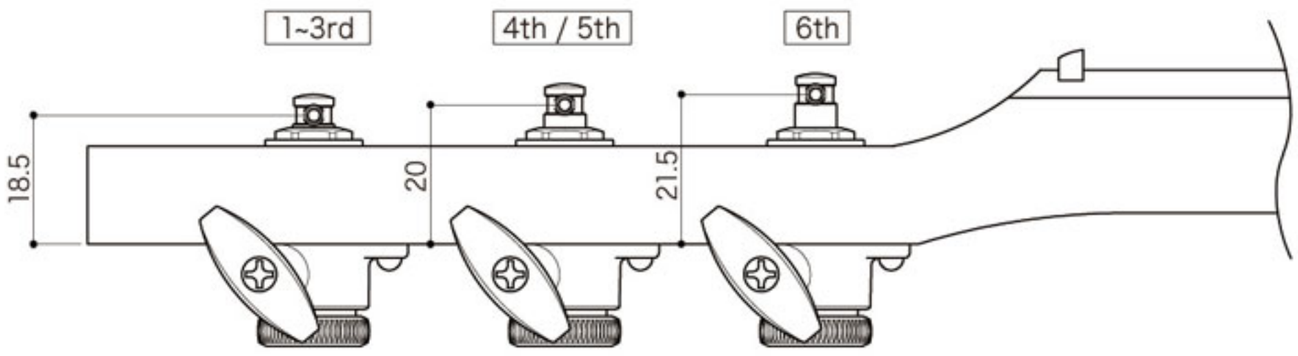

Magnum Lock-Trad string posts are available in three lengths that can be purchased in any combination to create staggered posts. Please make your choice when ordering.

SG Series

BUTTON OPTION

Choose the button from listed below when order for machine head is placed. (actual size ratio : about 50%)

Common use for all types.

AB07	07	05	05P1	P7	P8	B07	M07	EN07
(Aluminum)	(Zinc)	(Zinc)	(Plastic)	(Plastic)	(Plastic)	(Plastic)	(Plastic)	(Wood)

Exclusive use for 3-on-side (L3+R3) * It is unsuitable for "6 inline."

AB01	01	AB20	20	04	P4B	P4N	P1	P2	EN01	B01	B20	M01
(Aluminum)	(Zinc)	(Aluminum)	(Zinc)	(Zinc)	(Plastic)	(Plastic)	(Plastic)	(Plastic)	(Wood)	(Plastic)	(Plastic)	(Plastic)

String post dimension	STANDARD	MG	MG-T			HAP L3+R3	HAP L6 or R6		HAPM L3+R3	HAPM L6 or R6	
			SHORT	LONG	EX-LONG (OPTION)		1ST / 2ST	3ST ~ 6ST		1ST / 2ST	3ST ~ 6ST

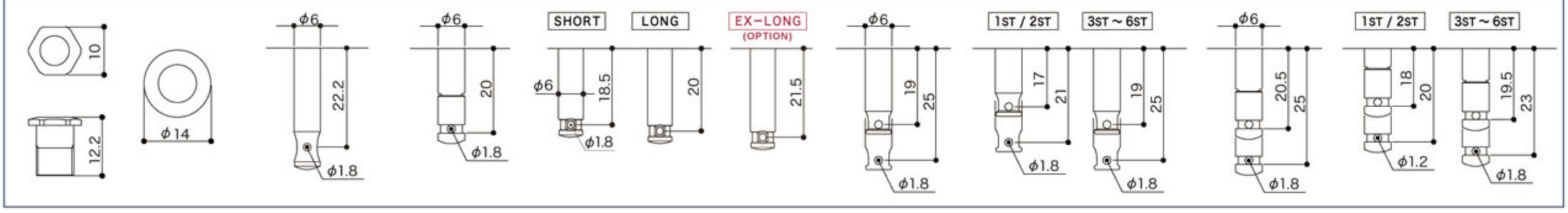

SG Series

Electric and Acoustic Guitar Machine Heads

SG301

Head Type	
String Post	STANDARD. MG. HAP. HAPM. MG-T
Finishes	C. GG. B. CK
Gear ratio	1 : 18
e.g.	SG301-EN01 SG301-01 MG-T SG301-P1 HAPM

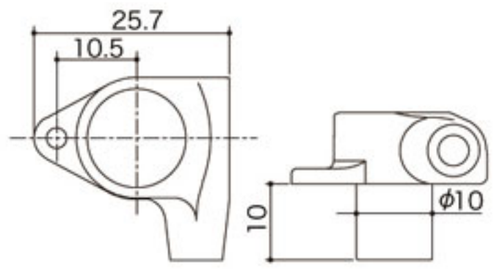

SG360

Head Type	
String Post	STANDARD. MG. HAP. HAPM. MG-T
Finishes	C. GG. B. CK
Gear ratio	1 : 14
e.g.	SG360-M07 SG360-05-R HAP SG360-01 MG

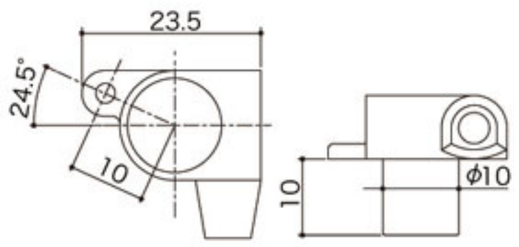

SG381

Head Type	
String Post	STANDARD. MG. HAP. HAPM. MG-T
Finishes	C. GG. B. CK
Gear ratio	1 : 16
e.g.	SG381-05-L MG SG381-B07-R-HAP SG381-04

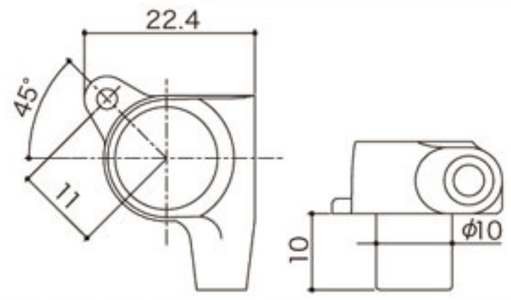

SGM

Head Type	
String Post	STANDARD. MG
Finish	C
Gear ratio	1 : 16
e.g.	SGM-05P1-L SGM-07-R-MG SGM-04

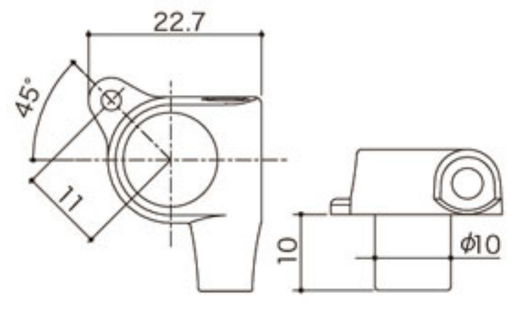

Finishes : C (Chrome), **GG** (Gold), **B** (Black Chrome), **CK** (Cosmo Black)

SX510 Series

Electric and Acoustic Guitar Machine Heads

It is said that the performance and durability of open-gear machine heads is inferior to sealed-gear (Rotomatic) types. Because the bushing is physically separate from the machine head body it is difficult to accurately position the string post through it when mounting onto the guitar. To solve these problems the SXB510 series includes a centering guide at the base of the body to ensure a flush fit combined with Rock Solid string posts. Also, the SXN510 series employs a nut mount system and can be installed as a direct replacement into the same holes drilled for Rotomatic style tuners.
The improved performance and durability which the SX510 series provides, thanks to GOTOH's unique design and manufacturing, gives you the chance to experience a sound you've never heard before.

SXB510

Head Type	
String Post	STANDARD
Finishes	N. C. GG. B. CK. XN. XC. XG
Gear ratio	1 : 15
e.g.	SXB510-SLB SXB510-M5

*Brass String Post.

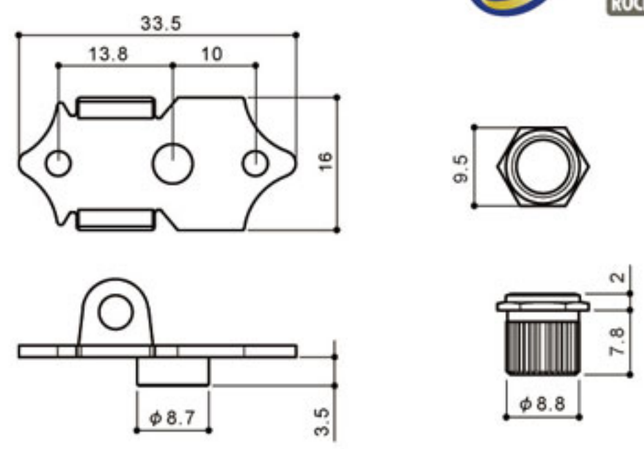

SXB510V

Head Type	
String Post	STANDARD
Finishes	N. C. GG. B. CK. XN. XC. XG
Gear ratio	1 : 15
e.g.	SXB510V-SLB SXB510V-M5

*Brass String Post.

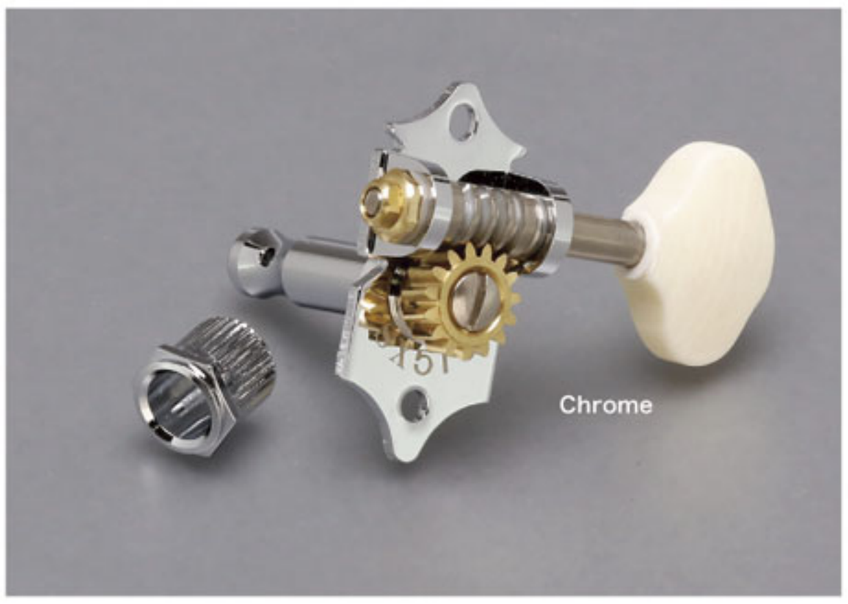

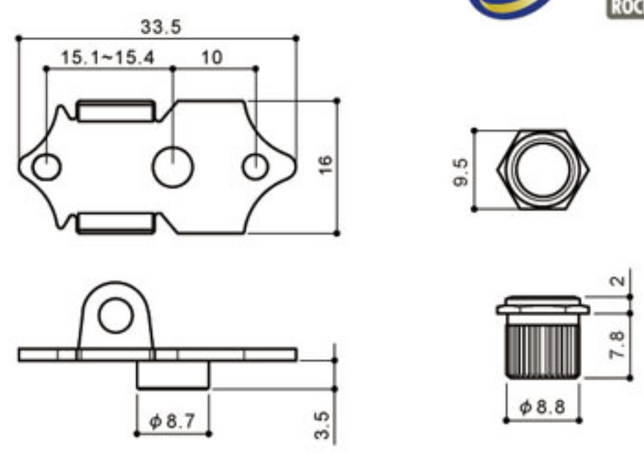

SXN510

Head Type	
String Post	STANDARD
Finishes	N. C. GG. B. CK. XN. XC. XG
Gear ratio	1 : 15
e.g.	SXN510-06M SXN510-B5

*Brass String Post.

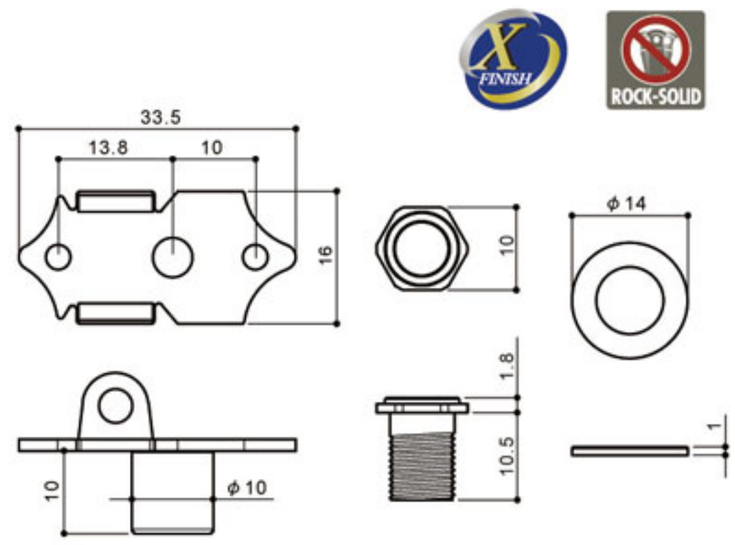

SXN510V

Head Type	
String Post	STANDARD
Finishes	N. C. GG. B. CK. XN. XC. XG
Gear ratio	1 : 15
e.g.	SXN510V-05M SXN510V-P5W

*Brass String Post.

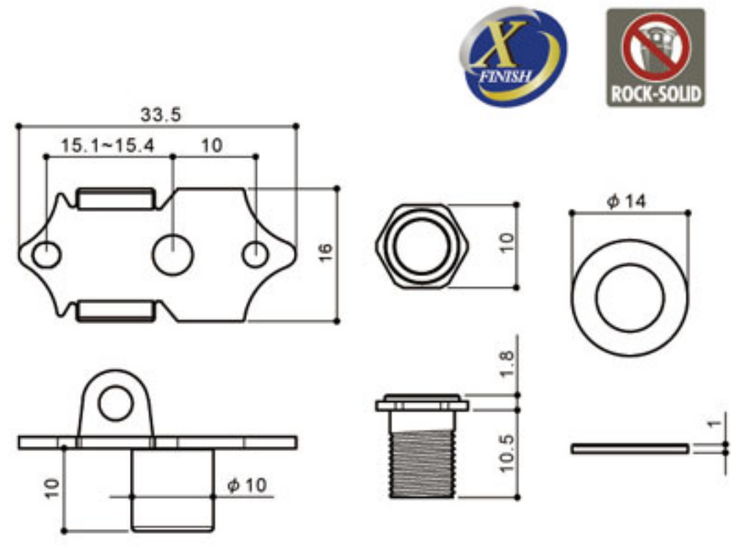

Finishes : N (Nickel), **C** (Chrome), **GG** (Gold), **B** (Black Chrome), **CK** (Cosmo Black), **XN** (X-Nickel), **XC** (X-Chrome), **XG** (X-Gold)

for Slotted Head

SEP700
SEP770
SEP780

Finishes	N. C. GG. B. CK. XN. XC. XG
Gear ratio	1 : 15
e.g.	SEP700-P5W SEP780-06M

J-700P

putting tool for bushing, an exclusive use for P-Post

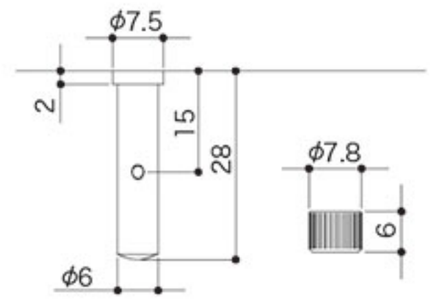

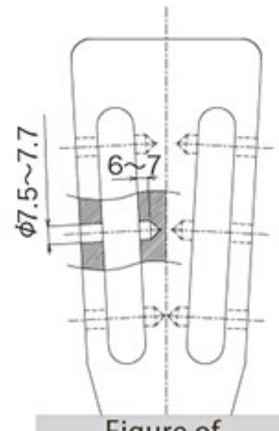

Figure of working reference

SE Series

Electric and Acoustic Guitar Machine Heads

SE700

Head Type	
String Post	STANDARD
Finishes	N. C. GG. B. CK. XN. XC. XG
Gear ratio	1 : 15
e.g.	SE700-P5W SE700-SL

*SELF-STOP NUT PAT.

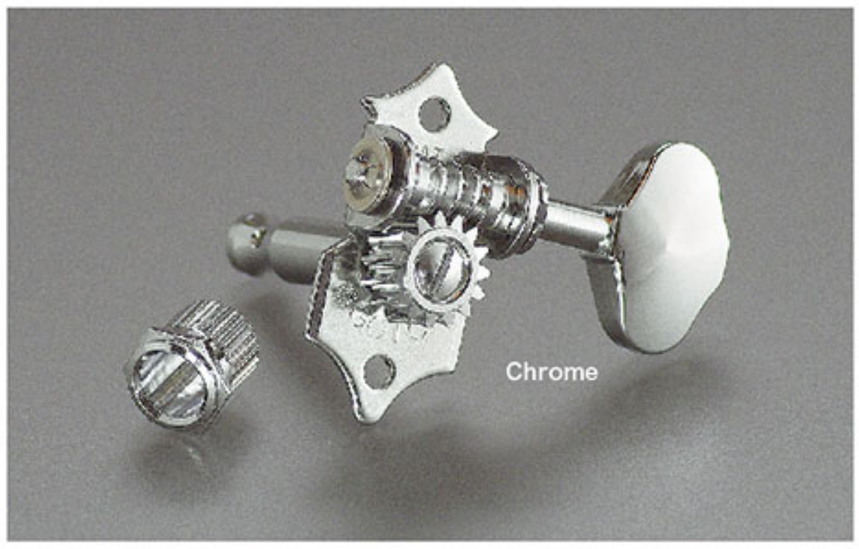

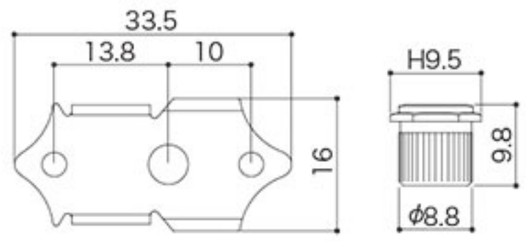

SE770

Head Type	
String Post	STANDARD
Finishes	N. C. GG. B. CK. XN. XC. XG
Gear ratio	1 : 15
e.g.	SE770-05M SE770-P5R

*SELF-STOP NUT PAT.

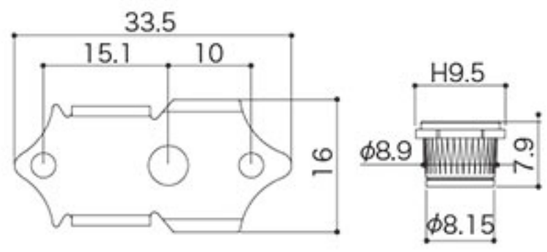

SE780

Head Type	
String Post	STANDARD
Finishes	N. C. GG. B. CK. XN. XC. XG
Gear ratio	1 : 15
e.g.	SE780-06M SE780-B5

*SELF-STOP NUT PAT.

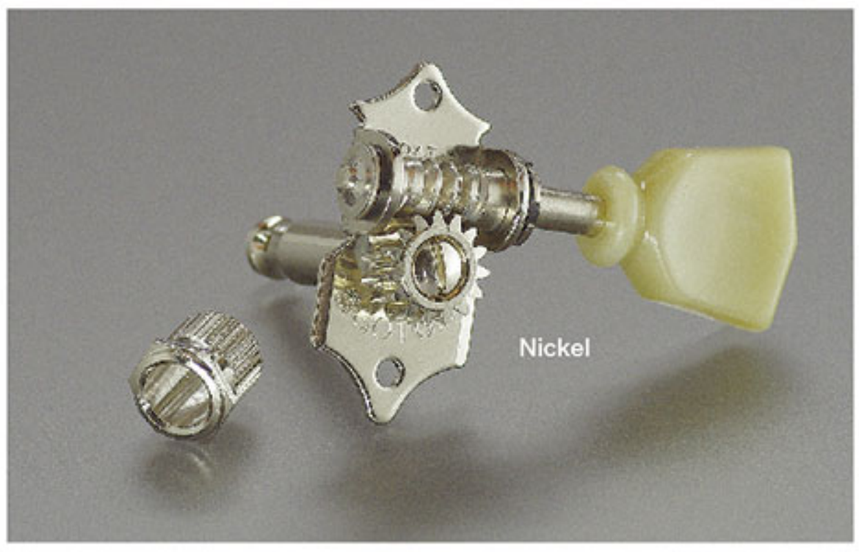

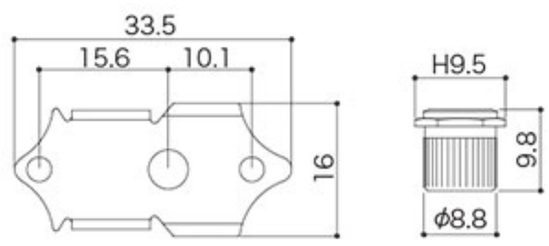

POST Dimension

SXB510 / SXB510V	SXN510 / SXN510V	SE700	SE770 / SE780

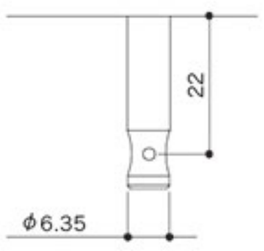

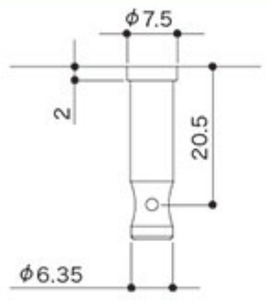

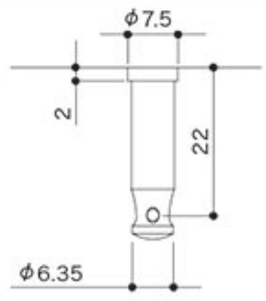

SX510 / SE Series BUTTON OPTION

Choose the button from listed below when order for machine head is placed. (actual size ratio : about 50%)

Exclusive use L3+R3

The button of "Zinc" becomes the same color as body.

05M	06M	SL	SLB	B5	M5	P5W	P5R	M6
(Zinc)	(Zinc)	(Plastic)	(Plastic)	(Plastic)	(Plastic)	(Plastic)	(Plastic)	(Plastic)

SD510 Series

Electric and Acoustic Guitar Machine Heads

Kluson type machine heads are criticized for not having the same smooth performance, efficiency and durability that sealed gear tuners have.
The SD510 series solves these problems by combining "Rock-solid"™ technology and "C-A-R-D" , found on enclosed gears in the base plate of the gear allowing the post to perfectly align itself with the bushing which attaches the gear to the headstock.
The SD510 series uses a torque balancer to ensure steady rotation of the tuner button giving high quality sound performance as well as great functionality. Through it is use of the ideal materials selected for each component part you also obtain a far superior sound.

SD510

Head Type	
String Post	STANDARD, MG, HAP, HAPM
Finishes	N. GG. B. CK. XN. XC. XG
Gear ratio	1 : 15
e.g.	SD510-P5W SD510-05M HAP

*Brass String Post.

Standard specification of MG and H.A.P.M. on this model is DSL. (Refer to page 4.)
※ C・A・R・D 3/3 includes.

SDS510

Head Type	
String Post	STANDARD, MG, HAP, HAPM
Finishes	N. GG. B. CK. XN. XC. XG
Gear ratio	1 : 15
e.g.	SDS510-05MA-L SDS510-SL-HAPM-R

*Brass String Post.

Standard specification of MG and H.A.P.M. on this model is DSL. (Refer to page 4.)
※ C・A・R・D 6 includes.

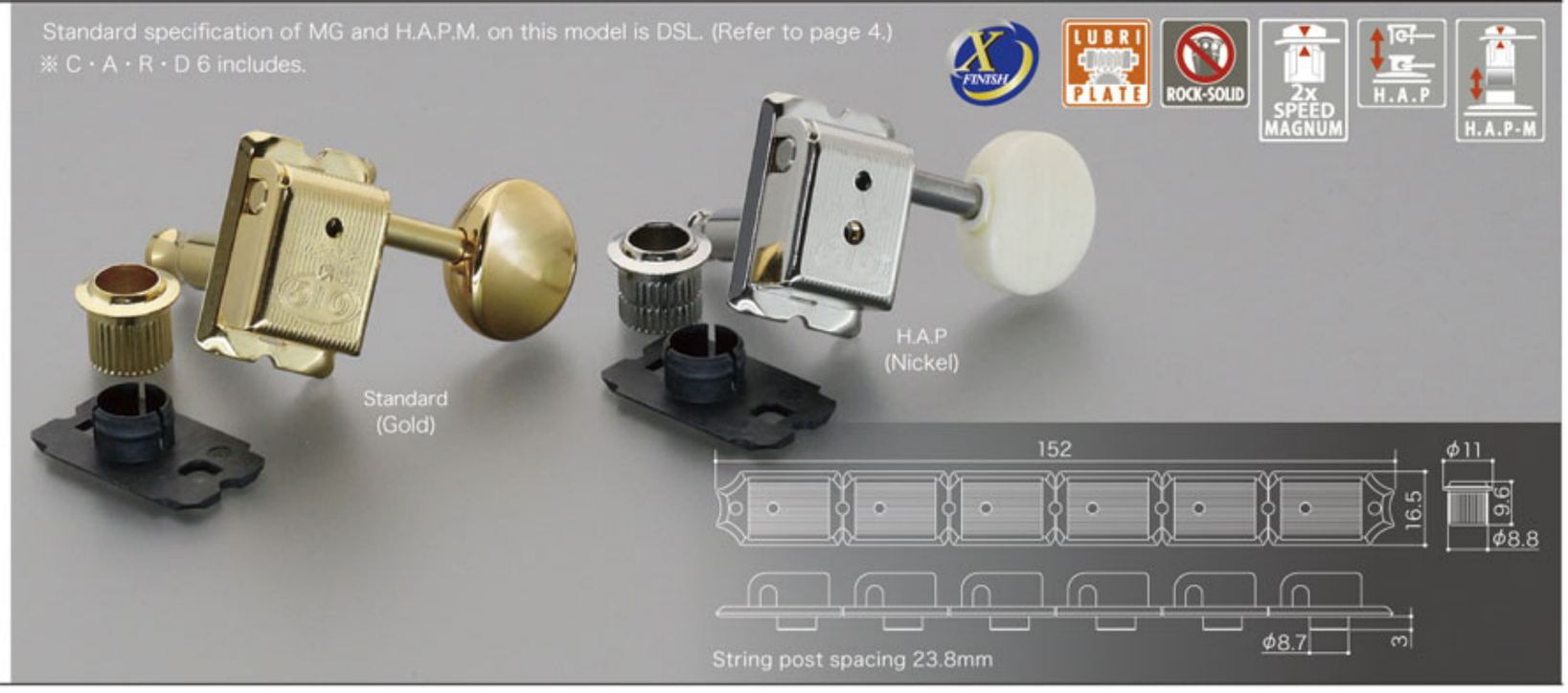

SD510 / SDS510 is equipped standardly with C・A・R・D

What's C・A・R・D ?

C – Carbon Fiber
Made from a specially formulated carbon fiber composite resin, CARD is both lightweight and extremely durable.

A – Align Center
CARD features a centering guide molded into the base that insures correct string post positioning in relation to the tuner bushing.

R – Resonant
The high-density CARD material transfers string vibration to the instrument headstock more efficiently, improving sustain and harmonics.

D – Defend
The CARD base is .05 mm thicker than the inside cavity of the tuner cover and acts as a spacer to prevent damage to the headstock finish due from sharp metal edges and over-tightening of mounting screws.

- NOTE -

C·A·R·D is designed specially to fit Gotoh SD Series machine heads, and it may not work with other models/brands of tuners.

C·A·R·D will now be offered as standard equipment with Gotoh SD510/SDS510 models, replacing the previously offered self-center guide.

C·A·R·D idea and design are Patent pending.

Finishes : **N** (Nickel), **GG** (Gold), **B** (Black Chrome), **CK** (Cosmo Black), **XN** (X-Nickel), **XC** (X-Chrome), **XG** (X-Gold)

SD90

Head Type	
String Post	STANDARD, MG, HAP, HAPM
Finishes	N. GG. B. CK
Gear ratio	1 : 15
e.g.	SD90-SLB SD90-05M HAP

SD91

Head Type	
String Post	STANDARD, MG, HAP, HAPM
Finishes	N. GG. B. CK
Gear ratio	1 : 15
e.g.	SD91-05M-L SD91-SL-MG-R

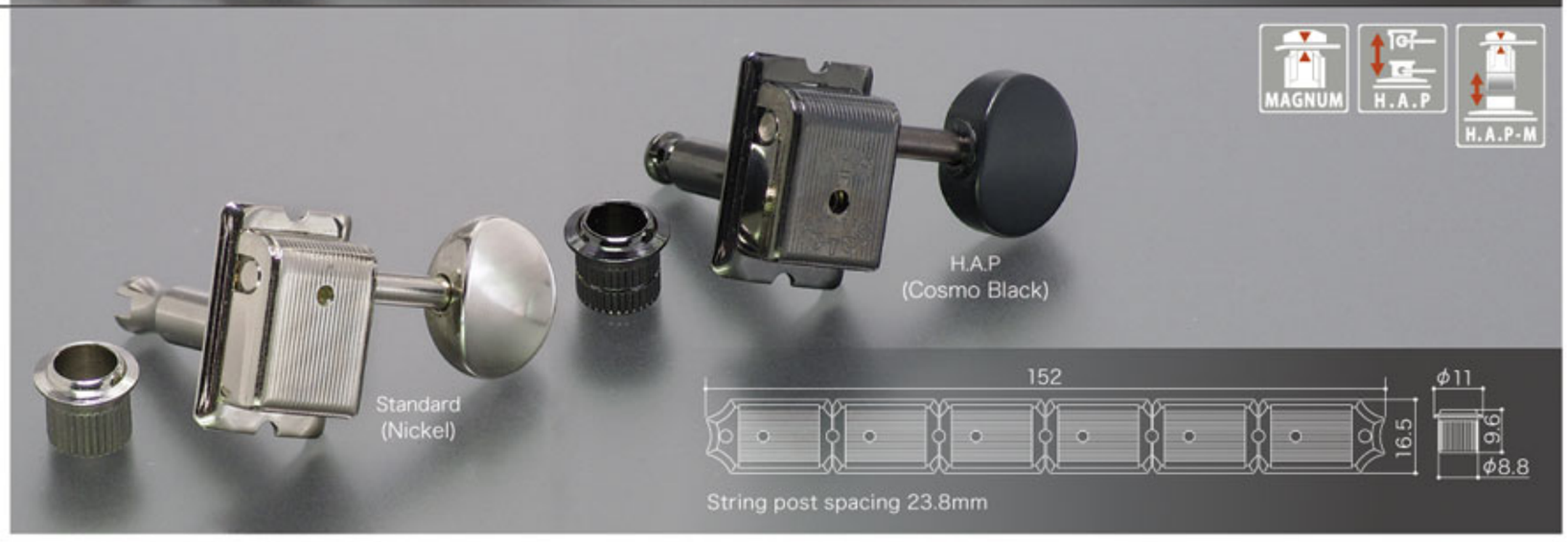

String post dimension	SD90 STANDARD	SD91 STANDARD	MG	SD90 HAP	SD91 HAP	SD90 HAPM	SD91 HAPM
	ϕ6.35, 19.5	ϕ6.35, 24.6	ϕ6, 20	ϕ6, 17, 24.5	ϕ6, 16, 20.5 (1~3rd); ϕ6, 17, 24.5 (4~6th)	ϕ6, 18, 21.5	16.5, 20 (1~3rd); 18, 21.5 (4~6th)

String post dimension	SD510 STANDARD	SDS510 STANDARD	MG	SD510 HAP	SDS510 HAP	SD510 HAPM	SDS510 HAPM
	ϕ6.35, 19.5	ϕ6.35, 24.6	ϕ6, 20	ϕ6, 17, 24.5	ϕ6, 16, 20.5 (1~3rd); ϕ6, 17, 24.5 (4~6th)	ϕ6, 18.5, 22	17, 20.5 (1~3rd); 18.5, 22 (4~6th)

SD510 / SD Series BUTTON OPTION

Choose the button from listed below when order for machine head is placed. (actual size ratio : about 50%)

Common use for all types.

The button of "Zinc" becomes the same color as body.

05M	05MA	06M	SL	SLB	B5	M5	P5W	P5R	M6
(Zinc)	(Plastic)	(Zinc)	(Plastic)	(Plastic)	(Plastic)	(Plastic)	(Plastic)	(Plastic)	(Plastic)

C·A·R·D 3/3

for SD90 (6pcs/set)

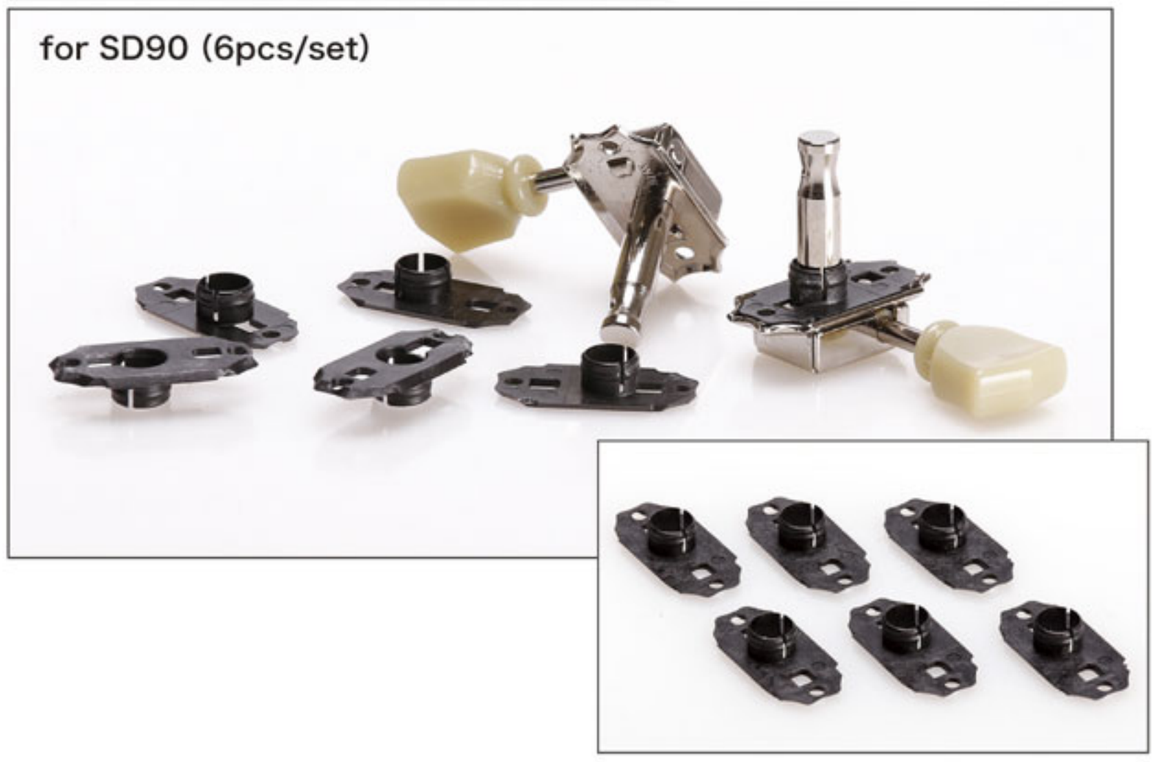

C·A·R·D 6

for SD91 (6pcs/set)

Finishes : **N** (Nickel), **C** (Chrome), **GG** (Gold), **B** (Black Chrome), **CK** (Cosmo Black)

Weight difference between the "SD90 Standard post" is only about 1.5g.

SD90 MG-T

Head Type	
Finishes	N. GG. B. CK
Gear ratio	1 : 15

*If you'd like to learn more about specs, and our web site or general catalog Please refer to the SD series.

Nickel

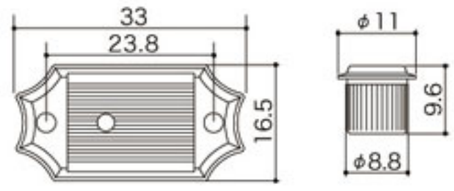

SD91 MG-T

Head Type	
Finishes	N. GG. B. CK
Gear ratio	1 : 15

*If you'd like to learn more about specs, and our web site or general catalog Please refer to the SD series.

Nickel

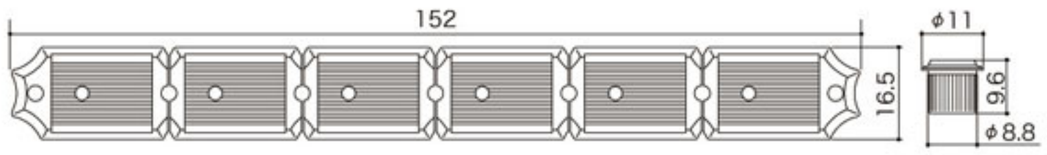

String Post Spacing 23.8mm

SD Series MG-T Dial Operation

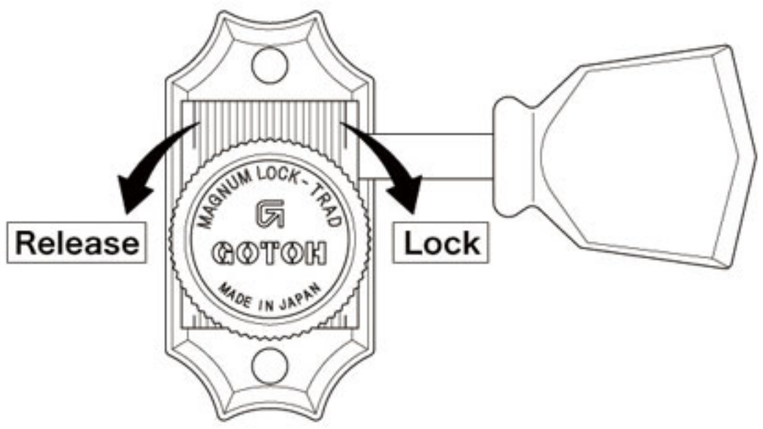

MG-T String Post Dimensions

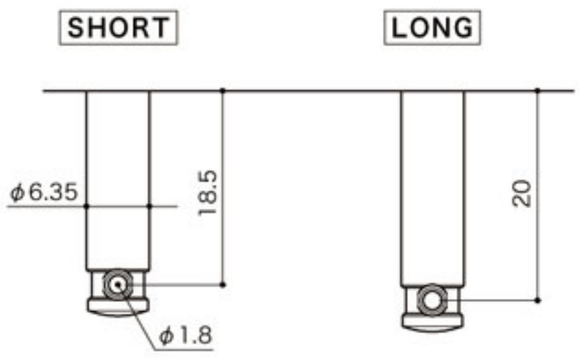

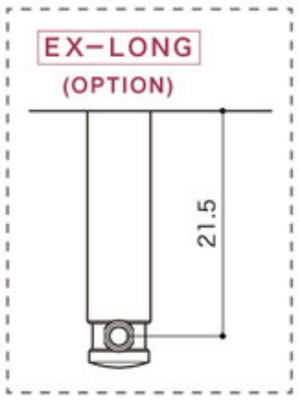

*In case of **SD90** (L3+R3)、LONG×3、LONG×3 **Fig1**

*In case of **SD91** (L6 or R6)、SHORT×3、LONG×3 **Fig2**

*As the example of an option、SHORT×3、LONG×2、EX-LONG×1 **Fig3**

MG-T Standard set L3+R3 Fig1

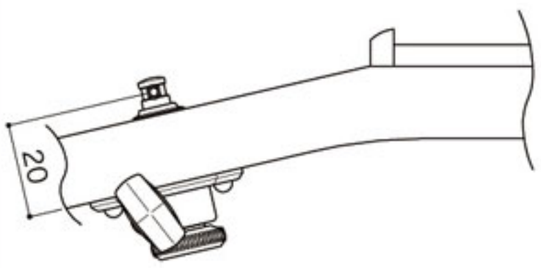

MG-T Standard set 6-In-Line Fig2

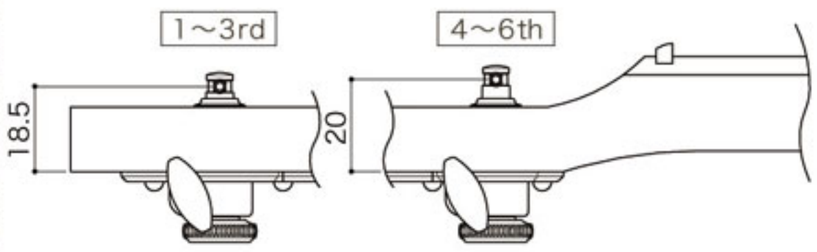

Example of an option set 6-In-Line Fig3

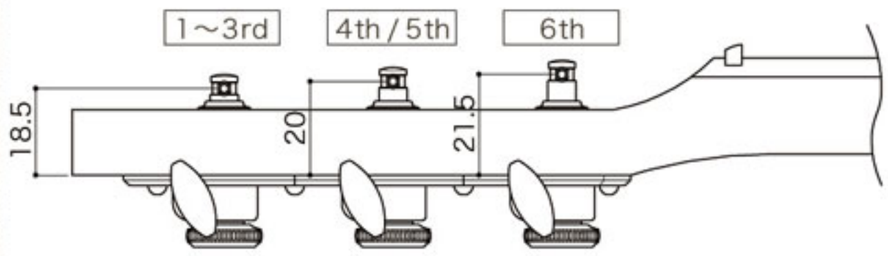

Magnum Lock-Trad string posts are available in three lengths that can be purchased in any combination to create staggered posts. Please make your choice when ordering.

BUTTON OPTION

Choose the button from listed below when order for machine head is placed. (actual size ratio : about 50%)

Common use for SD90 and SD91

The button of "Zinc" becomes the same color as body.

05M	05MA	06M	SL	SLB	B5	M5	P5W	P5R	M6
(Zinc)	(Plastic)	(Zinc)	(Plastic)	(Plastic)	(Plastic)	(Plastic)	(Plastic)	(Plastic)	(Plastic)

Finishes : N (Nickel), **GG** (Gold), **B** (Black Chrome), **CK** (Cosmo Black)

Planetary Banjo Tuner

A new concept in banjo tuners, developed with GOTOH's superior processing technology. With these ultra smooth tuners, precision tuning takes a quantum leap forward compared to previous products. In particular, the mechanism of the 5th string peg has been radically revised, solving all problems in past designs.

SPBJ-4

Finishes	N. C. GG
Gear ratio	1 : 4
e.g.	SPBJ-4-AI SPBJ-4-PW

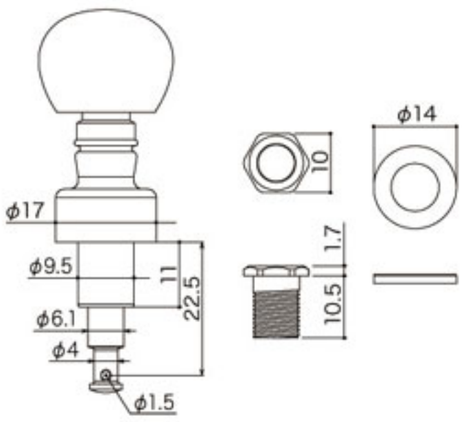

SPBJ-5

Finishes	N. C. GG
Gear ratio	1 : 13
e.g.	SPBJ-5-PW SPBJ-4-AIB

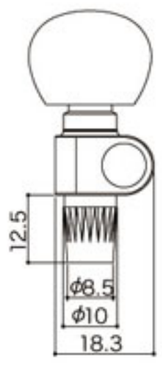

Finishes : **N** (Nickel), **C** (Chrome), **GG** (Gold)

SPBJ BUTTON OPTION

Choose the button from listed below when order for machine head is placed.
(actual size ratio : about 50%)

PW
(Plastic)

AI
(Plastic)

AIB
(Plastic)

Ukulele Tuners

UK12

Finishes	N. GG
Gear ratio	1 : 14
e.g.	UK12-05MA UK12-B5

The ultra-light peg constructed using a unique aluminum alloy.

With a gear ratio of 1:14, tuning is very user-friendly. There's no fear of the peg rotating back during a performance and since it's ultra-light, problems of "neck-dive" are also eliminated.

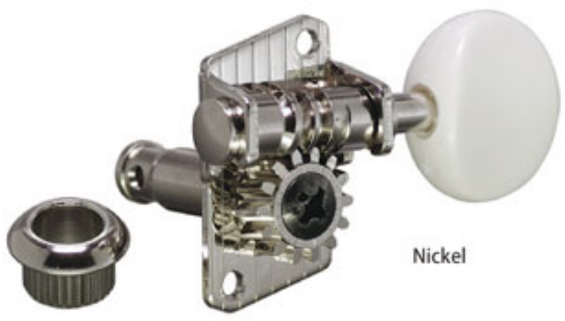

Nickel

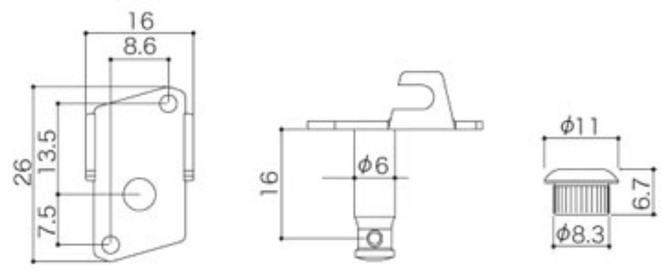

UK700

Finishes	N. GG
Gear ratio	1 : 15
e.g.	UK700-M5 UK700-B5

High performance pegs, with the H.A.P. system.

The renowned H.A.P system for guitar machine heads comes as standard. Height adjustable string post enables to change the string pressure. Pegs fit to 9 -14mm thickness headstock.

■ Image of H.A.P function

Gold

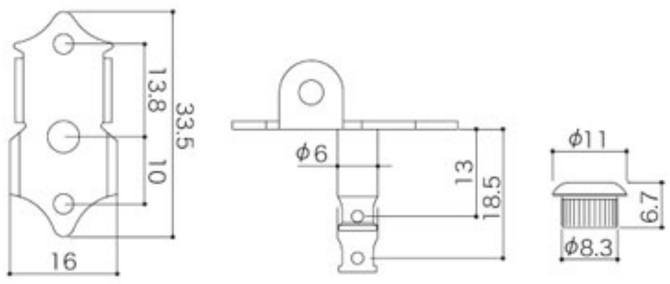

UK12 / UK700 BUTTON OPTION

Choose the button from listed below when order for machine head is placed. (actual size ratio : about 50%)

05MA
(Plastic)

B5
(Plastic)

M5
(Plastic)

UKA

Finishes	N. GG
Gear ratio	1 : 1
e.g.	UKA-3W UKA-4B

To keep weight down, aluminum alloy is used in the tuner components but these parts are not left with the usual anodizing finish, they are given a coating layer plated finish to ensure that they are extremely hard-wearing. To prevent counter rotation and yet provide smooth winding, our unique mechanism is employed.

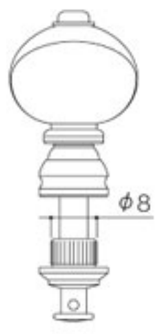

Gold

UKA BUTTON OPTION

Choose the button from listed below when order for machine head is placed. (actual size ratio : about 50%)

3W
(Plastic)

3R
(Plastic)

4I
(Plastic)

4B
(Plastic)

UKB

Finishes	N. GG
Gear ratio	1 : 1

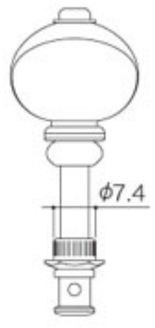

Nickel

Finishes : N (Nickel), GG (Gold)

Planetary Ukulele Tuners

Ukulele players, your long wait is over!
GOTOH's planetary ukulele tuners have arrived!

Experience smooth and stable tuning! With the 1:4 ratio planetary gear mechanism of the UPT/UPTL you can keep the classic look of traditional friction pegs without the slippage or need for tightening.

UPT / UPTL

Head Type	for Ukulele
Finishes	CW. B. GG
Gear ratio	1 : 4 PLANETARY GEAR
e.g.	UPT-UB7 UPTL-UB4B UPT-UBB

UPT
(Chrome White)

UPT
(Gold)

UPTL
(Black Chrome)

UPT

For head thickness 10 to 12mm

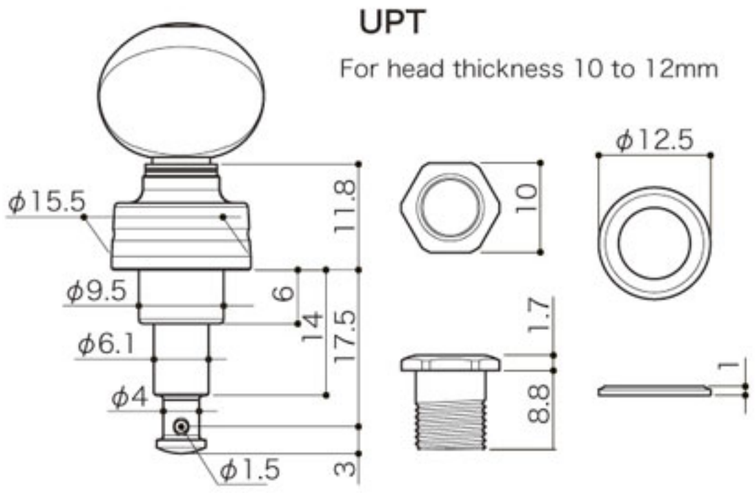

UPTL

For head thickness 11.5 to 13.5mm

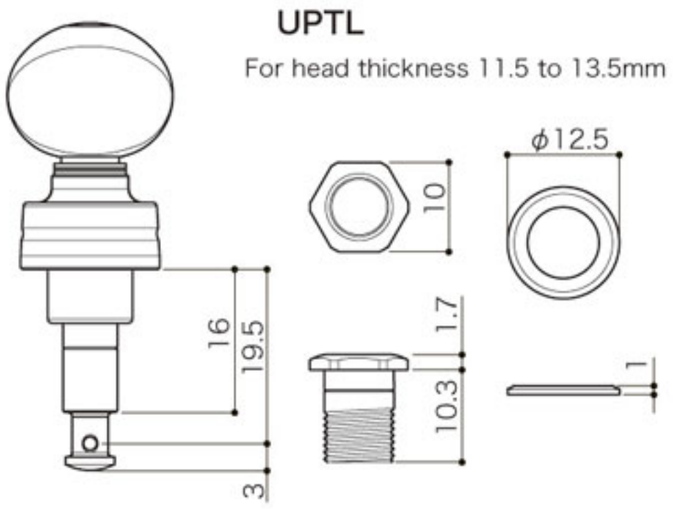

UPT / UPTL BUTTON OPTION

Choose the button from listed below when order for machine head is placed. (actual size ratio : about 50%)

UBB
(Plastic)

UBN
(Plastic)

UB7
(Plastic)

UB8
(Plastic)

UB4B
(Plastic)

UB4N
(Plastic)

UB5B
(Plastic)

Finishes : CW (Chrome White), **B** (Black Chrome), **GG** (Gold)

35G510 Series

Classic Guitar Machine Heads

These parts are born from GOTOH's latest, state of the art manufacturing processes.
In order to breathe life into these parts and to build the finest machine heads in the world, they are exquisitely finished by skilled artisans, with absolutely no compromise. The work of craftsmen on each individual part has gained the classic machine heads of the 35G510 series, critical acclaim and trustworthiness in the eyes of musicians all over the world.

* Please bear in mind that some conversion work to the guitar head may be necessary for fitting the "35P Rock-Solid". (Please refer to conversion reference)

35G510AM

String Post	35G. 35AR. 35ARB. 35P
Finishes	XN. XG. XCK
Gear ratio	1 : 16
e.g.	35G510AM-KM 35ARB510AM-BM
Plate Material	HARD ALUMINUM

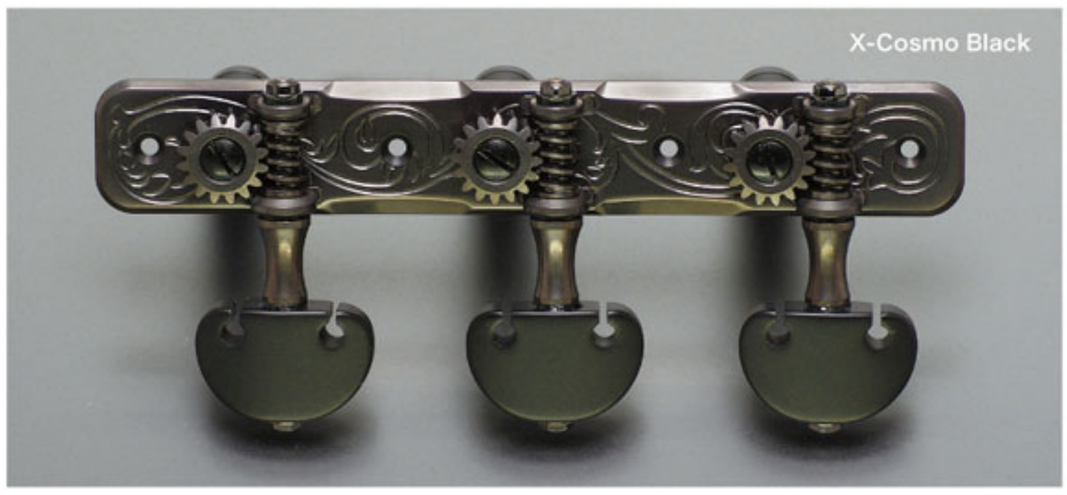

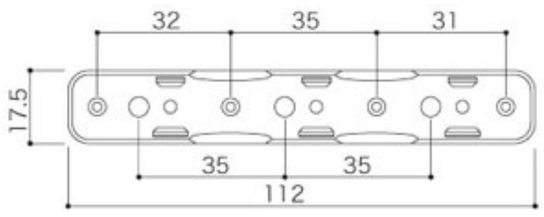

35G510MF

String Post	35G. 35AR. 35ARB. 35P
Finishes	XN. XG. XCK
Gear ratio	1 : 16
e.g.	35G510MF-BB 35G510MF-KM
Plate Material	BRASS

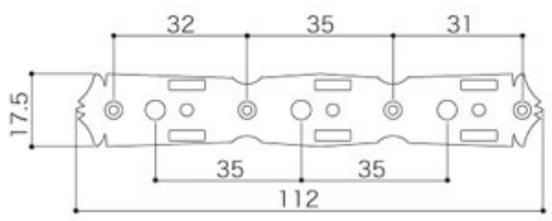

35G510C

String Post	35G. 35AR. 35ARB. 35P
Finish	GG
Gear ratio	1 : 16
e.g.	35G510C-BB 35P510C-P
Plate Material	BRASS

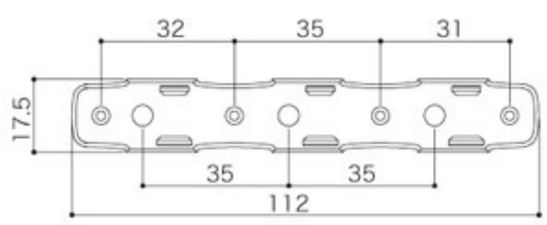

Finishes : **N** (Nickel), **GG** (Gold), **CK** (Cosmo Black), **SB** (Solid Brass), **MTG** (Mat Gold), **XN** (X-Nickel), **XG** (X-Gold), **XCK** (X-Cosmo Black)

35G510 Series POST Dimensions

putting tool for bushing,
an exclusive use for P-Post

J-700P

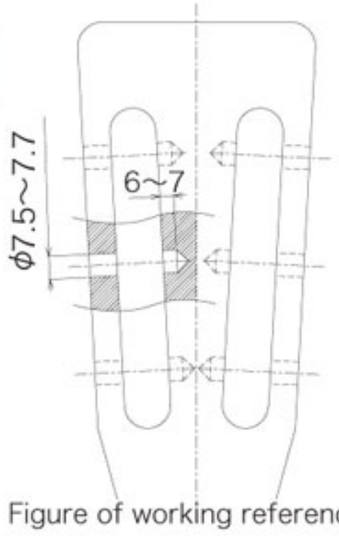

Figure of working reference

35G
(Plasic)

35AR
(Aluminum with Plastic roller)

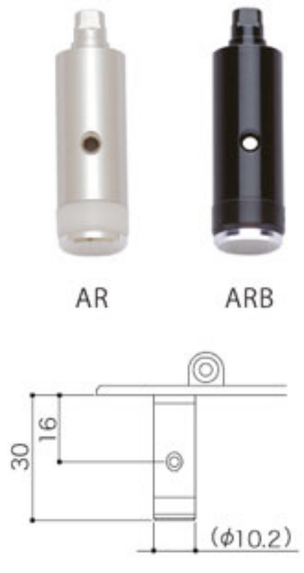

35P
(Steel)

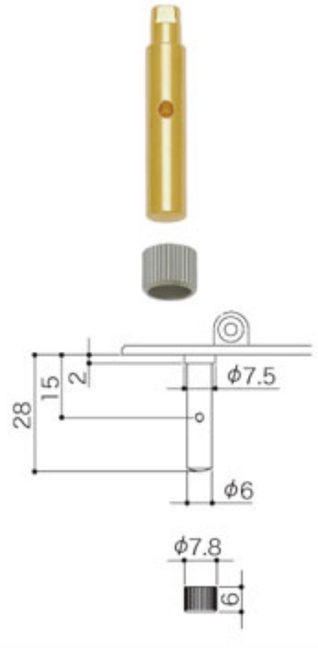

35G510 Series BUTTON OPTION

Choose the button from listed below when order for machine head is placed. (actual size ratio : about 50%)

M	BM	EN	KB	KM	BB	P
(Shell)	(Shell)	(Wood)	(Plastic)	(Plastic)	(Plastic)	(Plastic)

35G510P

String Post	35G. 35AR. 35ARB. 35P
Finish	GG
Gear ratio	1 : 16
e.g.	35G510P-KM 35AR510P-KB
Plate Material	BRASS

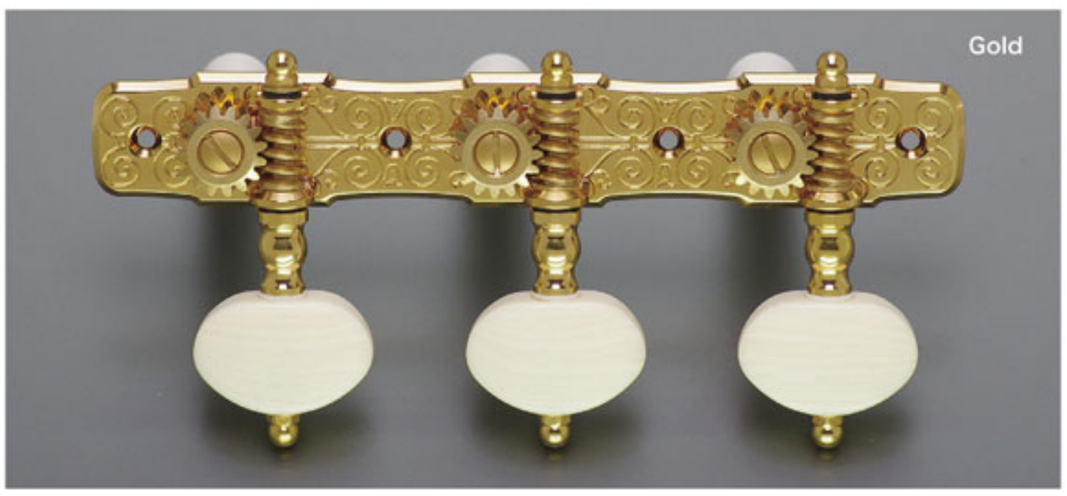

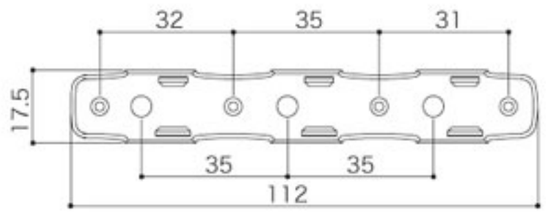

35G510QC

String Post	35G. 35AR. 35ARB. 35P
Finish	MTG
Gear ratio	1 : 16
e.g.	35G510QC-KM 35ARB510QC-EN
Plate Material	BRASS

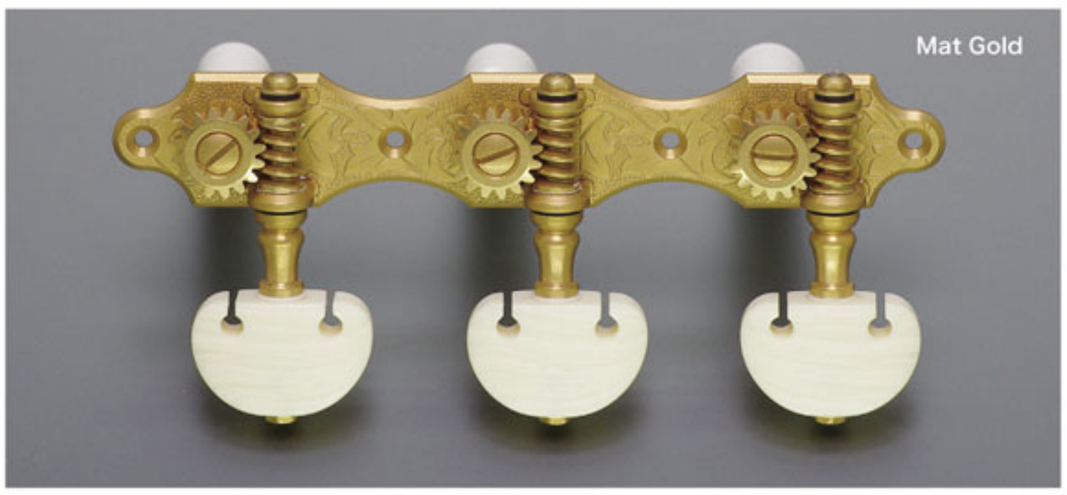

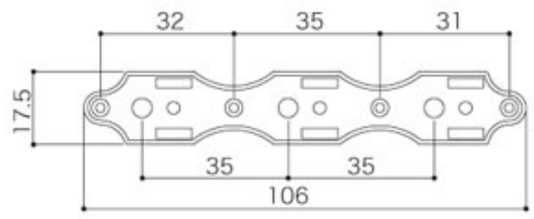

35G510S

String Post	35G. 35AR. 35ARB. 35P
Finishes	N. CK. XN. XG
Gear ratio	1 : 16
e.g.	35G510S-P 35P510S-BM
Plate Material	BRASS

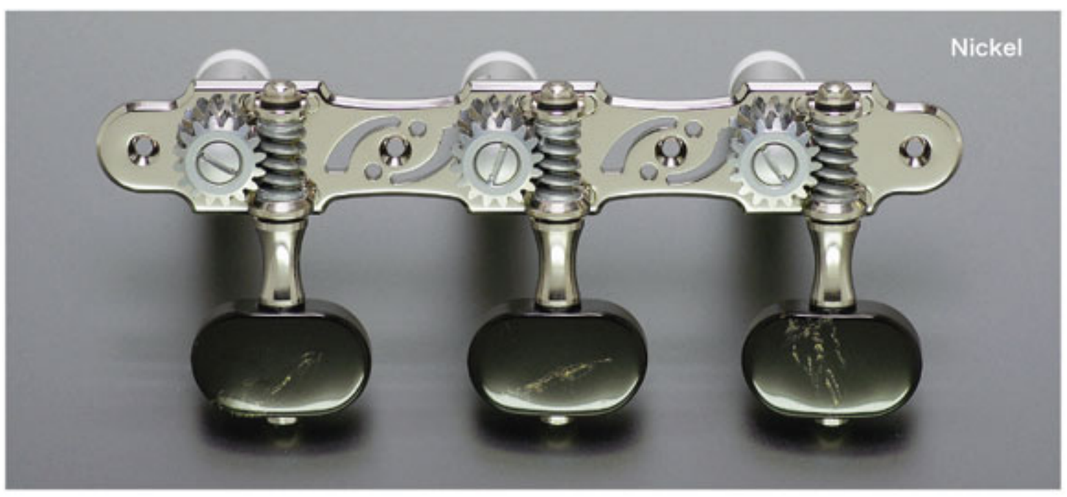

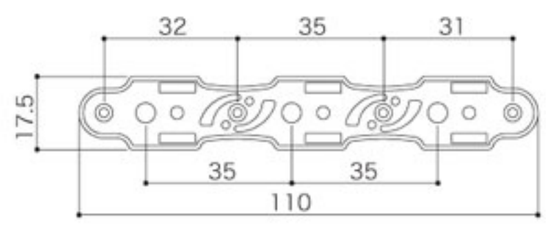

* Please bear in mind that some conversion work to the guitar head may be necessary for fitting the "35P Rock-Solid". (Please refer to conversion reference)

35G3600

String Post
35G. 35P

Gear ratio
1 : 14

e.g.
35G3600-BB
35P3600-2W

Finish : FG (Flash Gold)

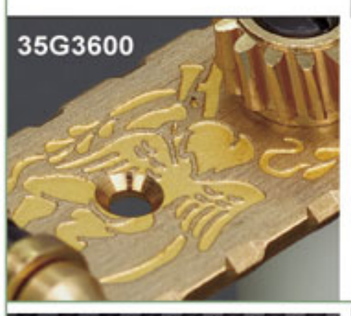

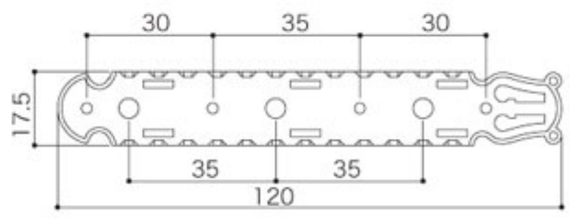

35G3600T

String Post
35G. 35P

Gear ratio
1 : 14

e.g.
35G3600T-1R
35P3600T-EN

Finish : Two-Tone (Ni, GG)

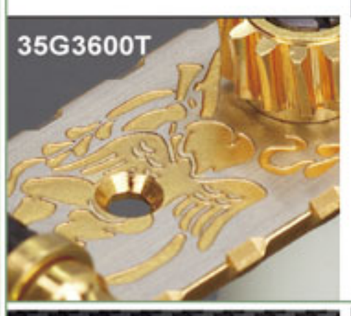

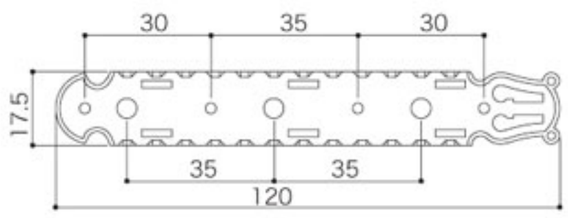

35G1800

String Post
35G. 35P

Finish
SB

Gear ratio
1 : 14

e.g.
35G1800-2M
35P1800-1W

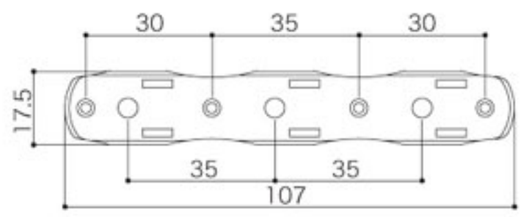

35G1600

String Post
35G. 35P

Finish
GG

Gear ratio
1 : 14

e.g.
35G1600-2R
35P1600-1W

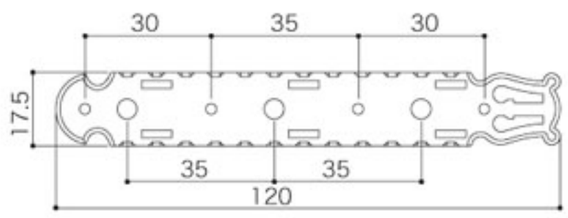

35G620

String Post
35G. 35P

Finish
GG

Gear ratio
1 : 14

e.g.
35G620-EI
35P620-EW

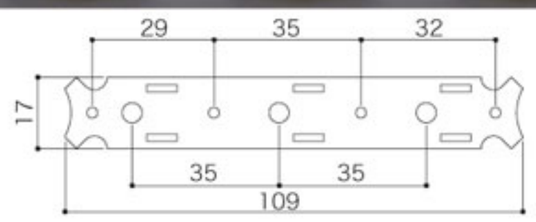

35G Series BUTTON OPTION

Choose the button from listed below when order for machine head is placed. (actual size ratio : about 50%)

1W	1R	2W	2R	2M
(Plastic)	(Plastic)	(Plastic)	(Plastic)	(Plastic)

BB	EN	EW	EI
(Plastic)	(Wood)	(Plastic)	(Plastic)

String post dimension

	35G	35P
for 35G420, 35G350	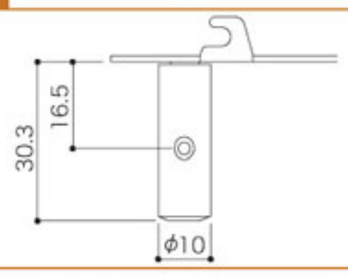	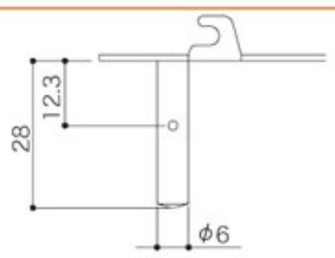

String post dimension

for 35G3600, 35G1800, 35G1600, 35G620

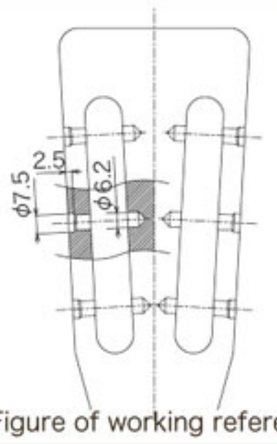

Figure of working reference

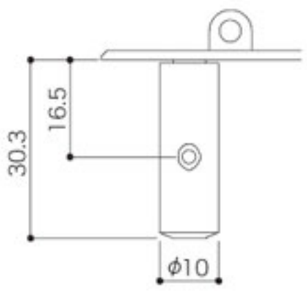

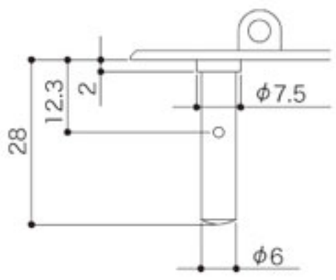

35G420

String Post
35G. 35P

Finish
FG

Gear ratio
1 : 14

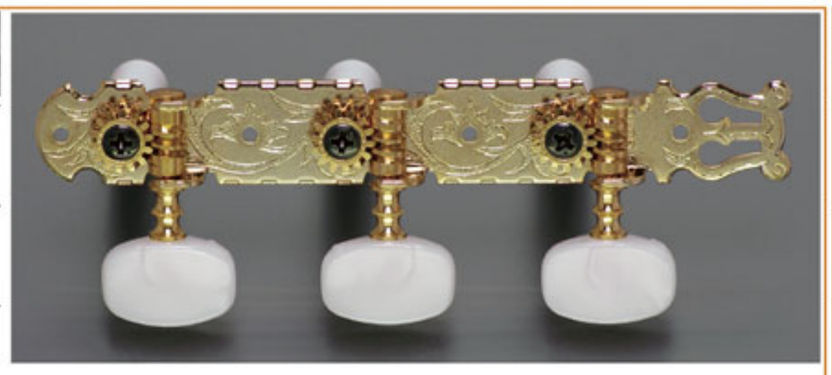

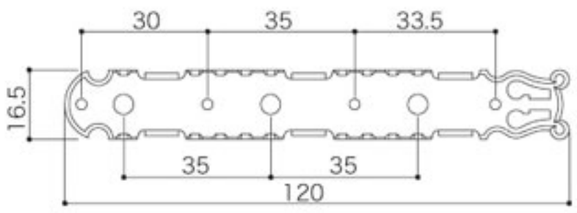

35G350

String Post
35G. 35P

Finish
N

Gear ratio
1 : 14

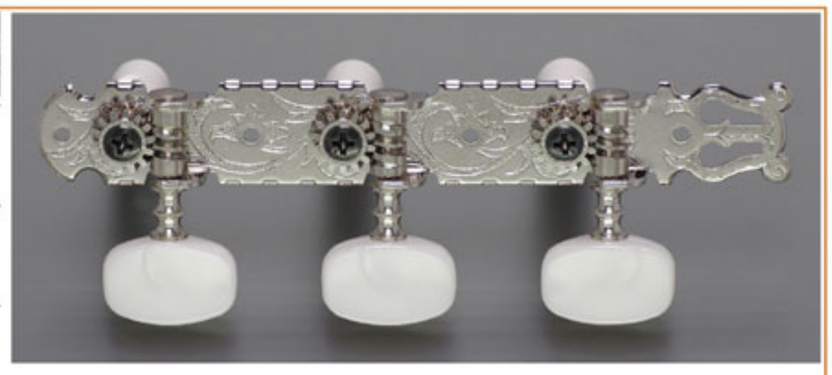

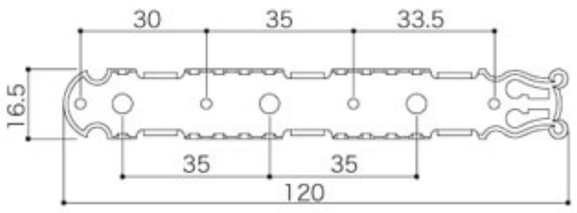

Finishes : **N** (Nickel), **SB** (Solid Brass), **FG** (Flash Gold), **GG** (Gold)

Mandolin Machine Heads

MA40

Finishes
N. GG

Gear ratio
1 : 14

e.g.
MA40-MM
MA40-MP

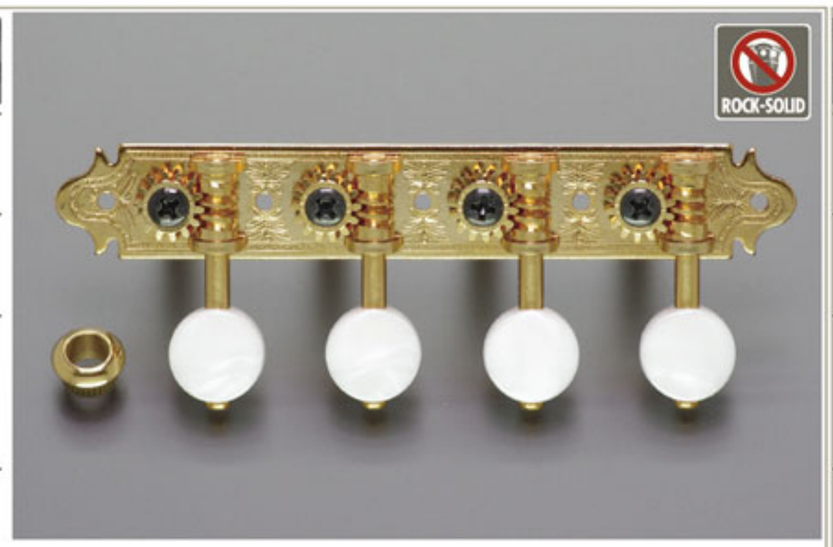

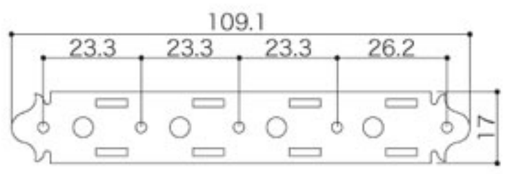

MA40R

Finishes
N. GG

Gear ratio
1 : 14

e.g.
MA40R-MP
MA40R-MB

REVERSE GEARING

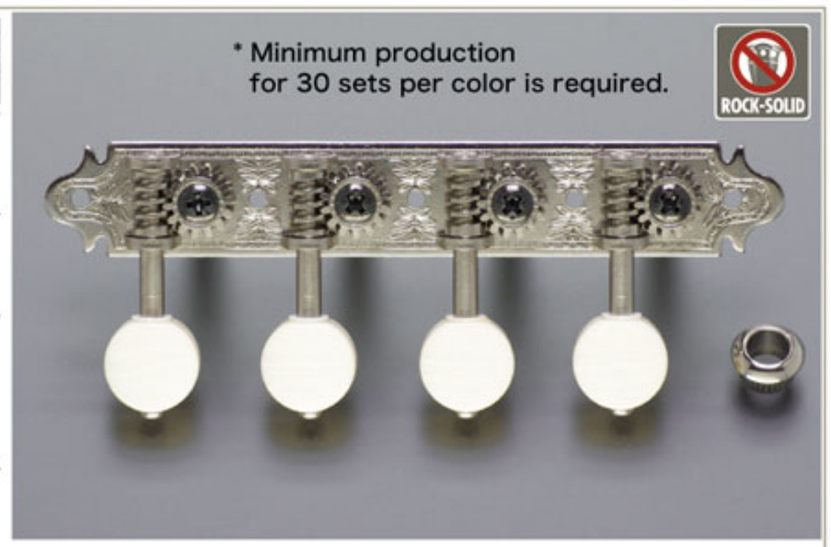

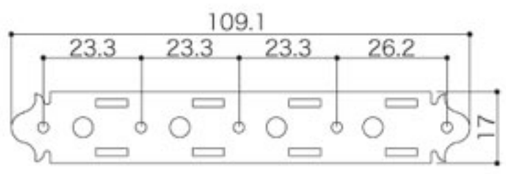

MF40

Finishes
N. GG

Gear ratio
1 : 14

e.g.
MF40-MB
MF40-MP

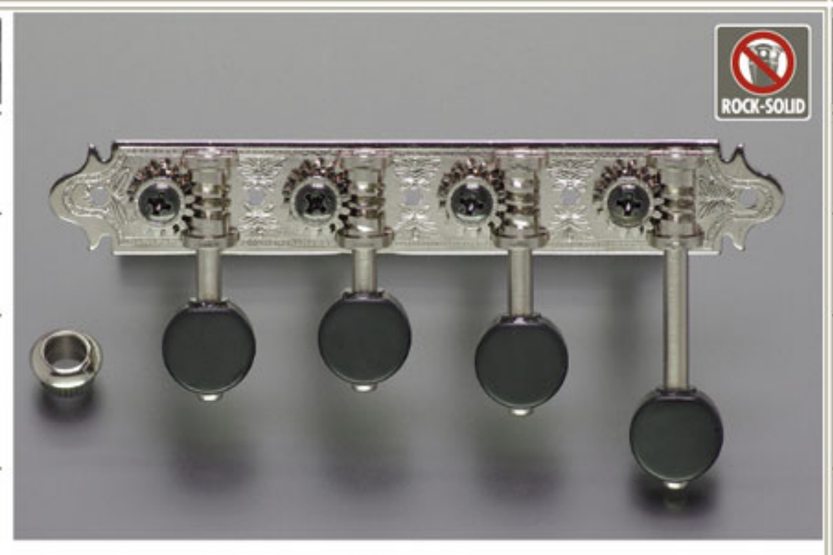

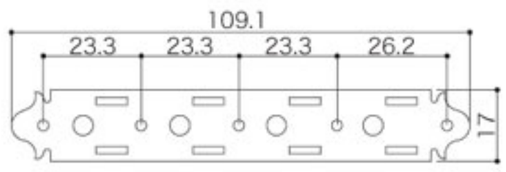

MF40R

Finishes
N. GG

Gear ratio
1 : 14

e.g.
MF40R-MP
MF40R-MM

REVERSE GEARING

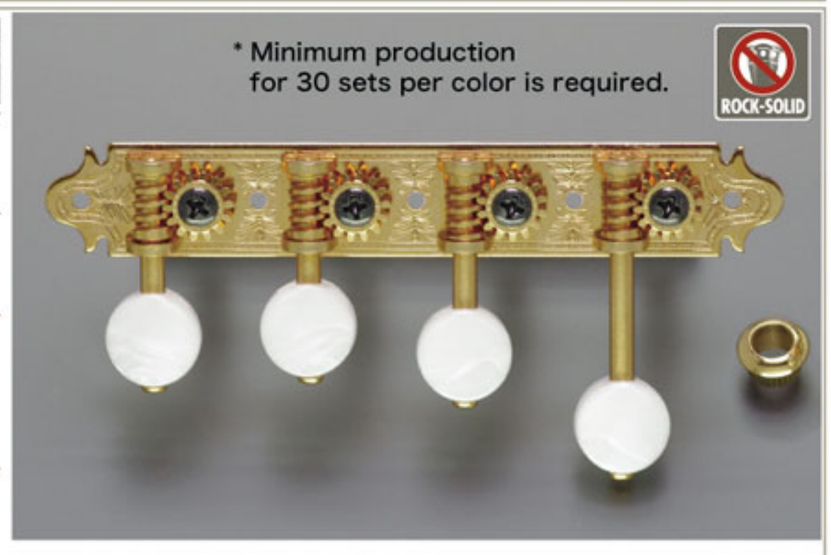

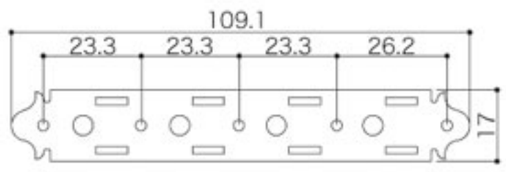

String post dimension

for MA40, MA40R, MF40, MF40R

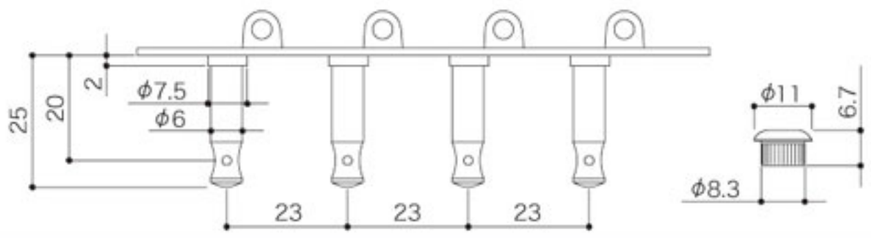

MA40/MF40 BUTTON OPTION

Choose the button from listed below when order for machine head is placed. (actual size ratio : about 50%)

MP

MB

MM

M120

Finishes
N. GG

Gear ratio
1 : 14

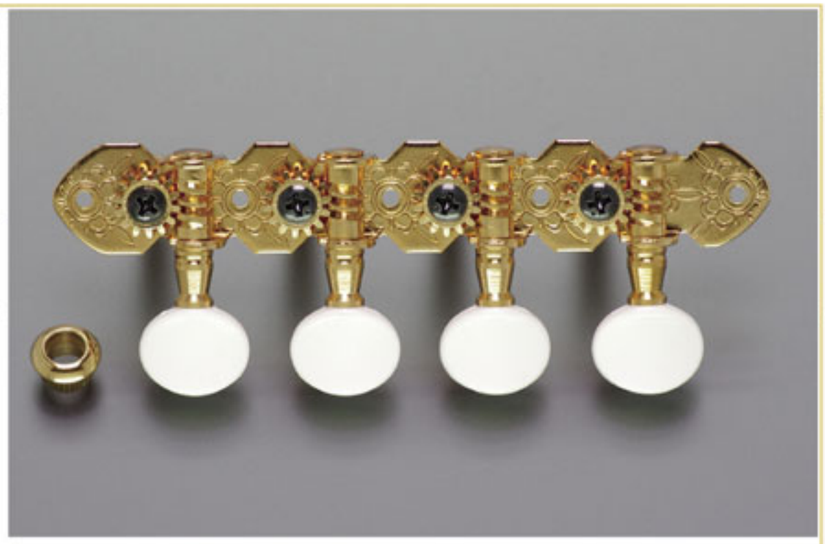

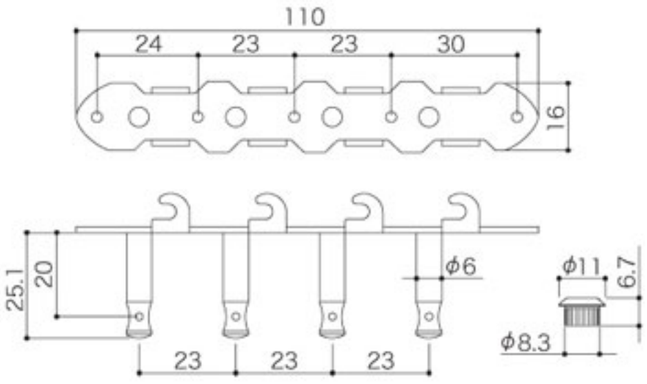

M120S

Finishes
N. GG

Gear ratio
1 : 14

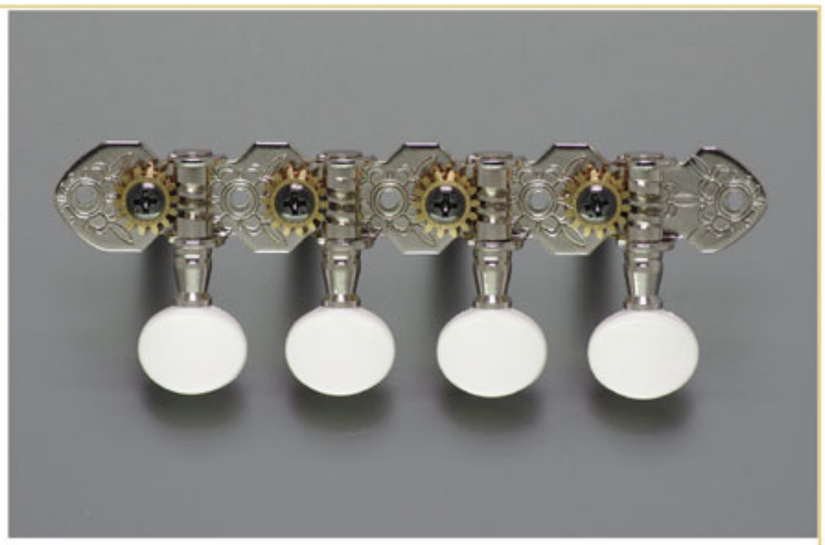

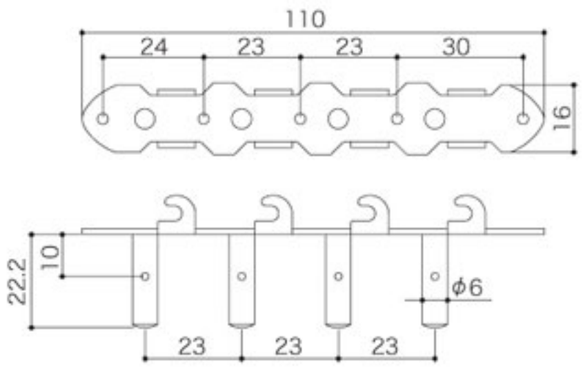

RES-O-LITE Series

Super lightweight bass machine heads.

Bass guitars have weighty machine heads and by their very nature have always suffered from "neck-dive". With the advent of 5 and 6 string basses, this tendency became still more acute, making long sessions uncomfortable for the musician.
The RES-O-LITE series was developed to solve this problem. By chiefly using the special alloy "duralumin", excellent weight savings are achieved.
By use of the Rock-Solid mechanism the GB350 transmits string movement more powerfully, whilst retaining tuning and giving a smooth winding experience.

GB350 RES-O-LITE

Head Type	
Finishes	C. GG. B. CK. XN. XC. XG
Gear ratio	1 : 20

ALUMINUM SHAFT, WORM AND GEAR
PLASTIC BUTTON (PLATED)
WORLD DESIGN PAT.

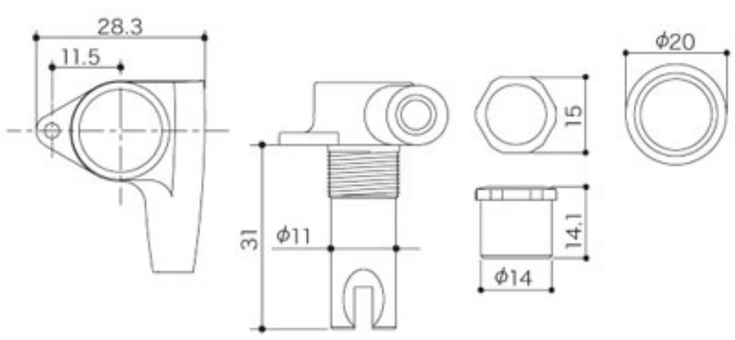

GB640 RES-O-LITE

Head Type	
Finishes	N. GG. B. CK. XN. XC. XG
Gear ratio	1 : 28

LEFT SIDE ONLY

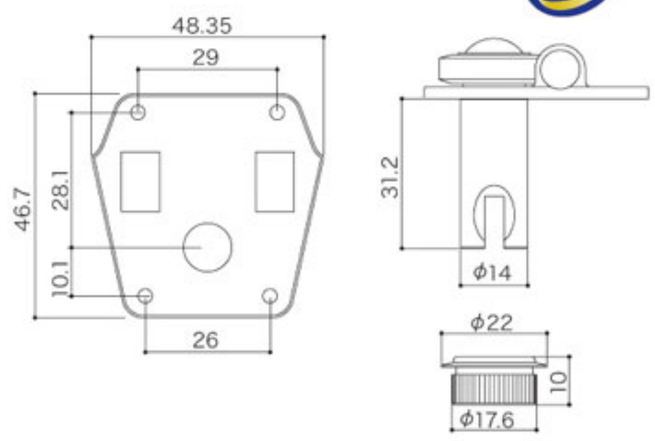

GBR640 RES-O-LITE

Head Type	
Finishes	N. GG. B. CK. XN. XC. XG
Gear ratio	1 : 28

REVERSE WIND / LEFT SIDE ONLY

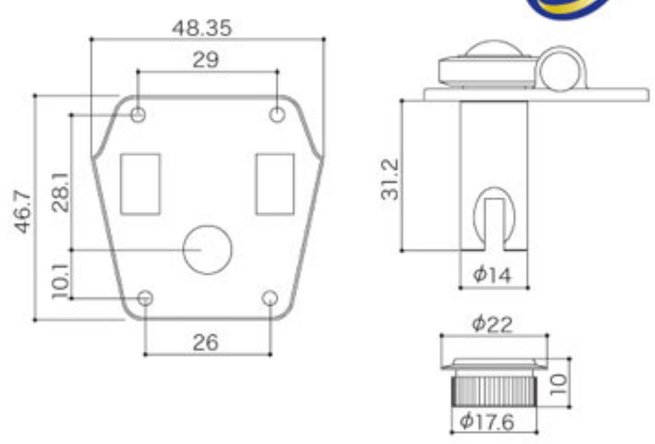

GB528 RES-O-LITE

Head Type	
Finishes	N. GG. B. CK. XN. XC. XG
Gear ratio	1 : 26

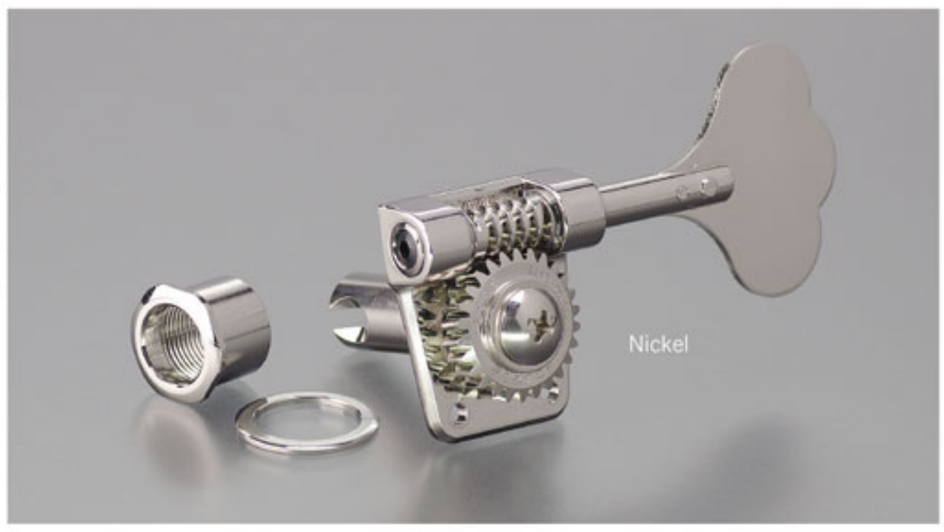

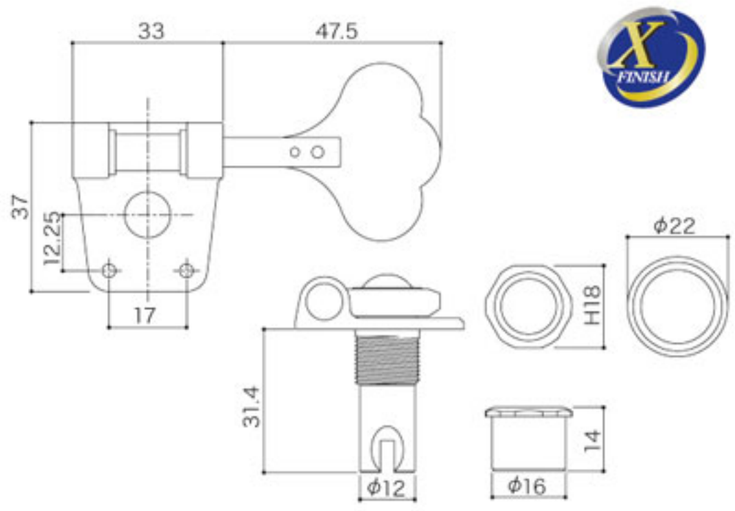

GB528S RES-O-LITE

Head Type	
Finishes	N. GG. B. CK. XN. XC. XG
Gear ratio	1 : 26

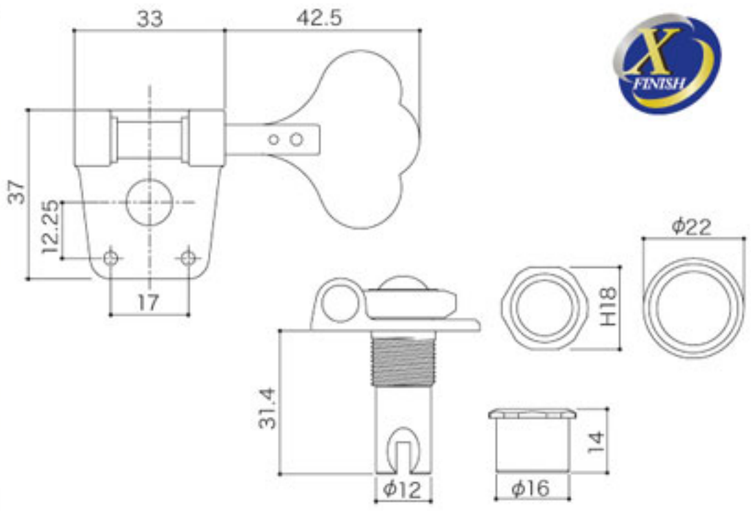

Finishes : **N** (Nickel), **C** (Chrome), **GG** (Gold), **B** (Black Chrome), **CK** (Cosmo Black), **XN** (X-Nickel), **XC** (X-Chrome), **XG** (X-Gold)

weight comparison (per pc.)

GOTOH old models		RES-O-LITE Series	
GB70	64.4g	GB350	40.0g
GB9	115.5g	GB640	66.9g
GB30	83.0g	GB528	59.2g

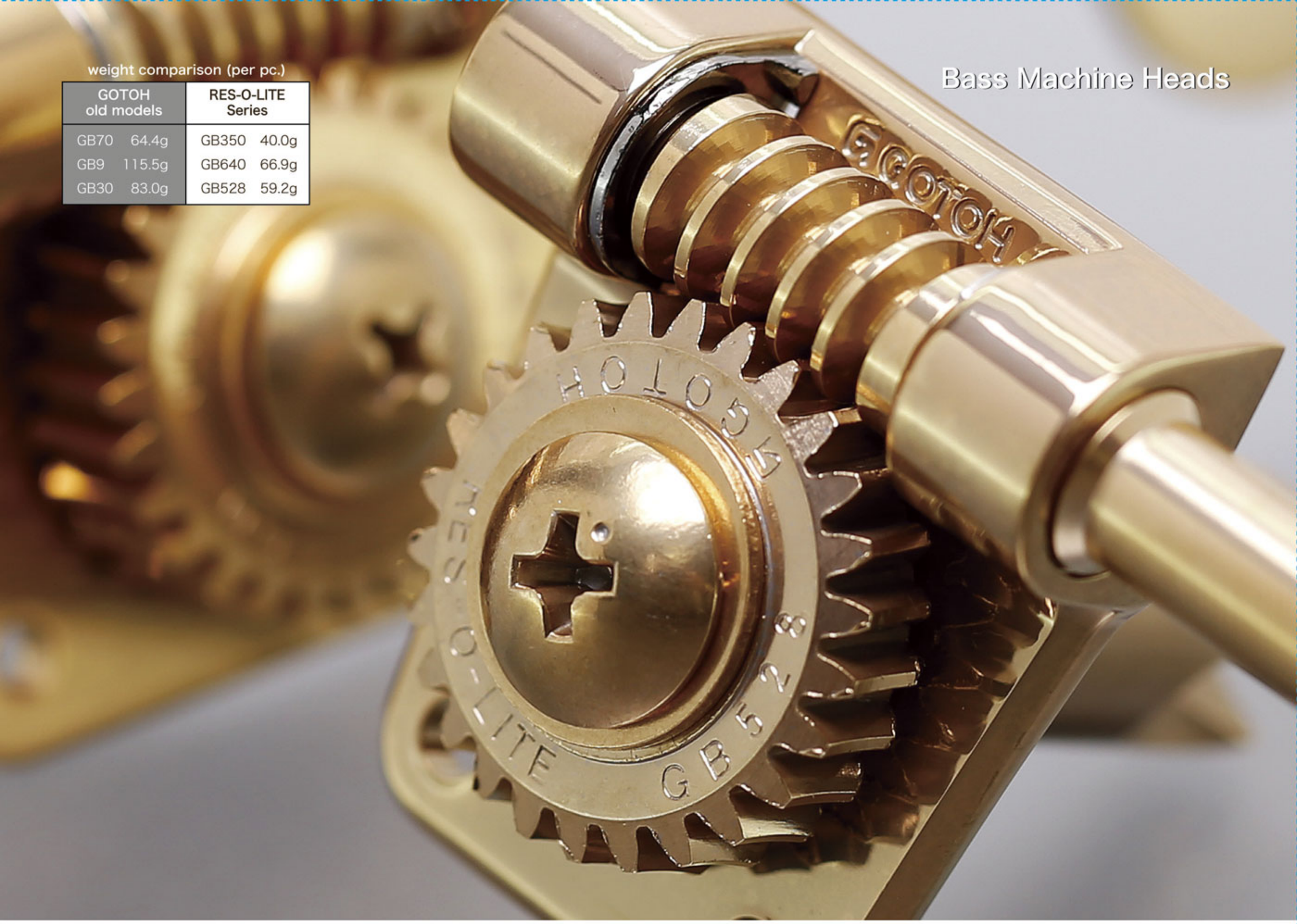

GB Regular Series

GB720

Head Type	
Finishes	C. GG. B. CK
Gear ratio	1 : 20

ALUMINUM SHAFT
PLASTIC BUTTON (PLATED)
WORLD DESIGN PAT.

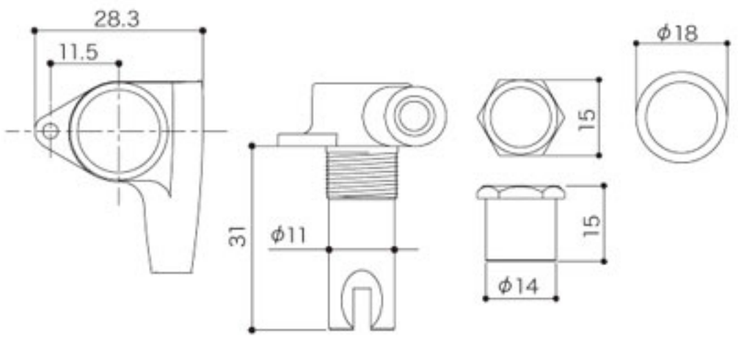

GB707

Head Type	
Finishes	C. GG. B. CK
Gear ratio	1 : 20

WORLD DESIGN PAT.

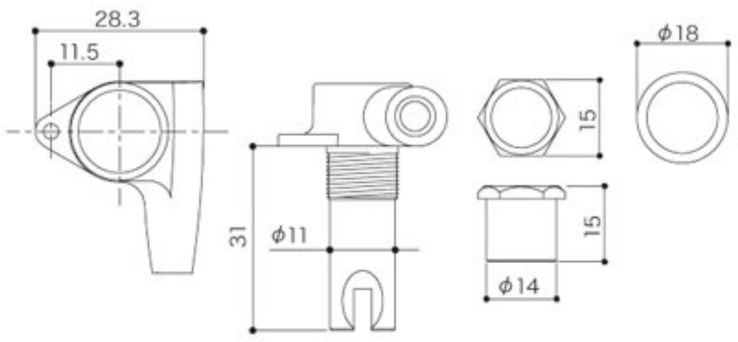

GB10

Head Type	
Finishes	N. GG. B. CK
Gear ratio	1 : 20

*Addtional improvement :
"Friction-Free Ring" was added to the inside.

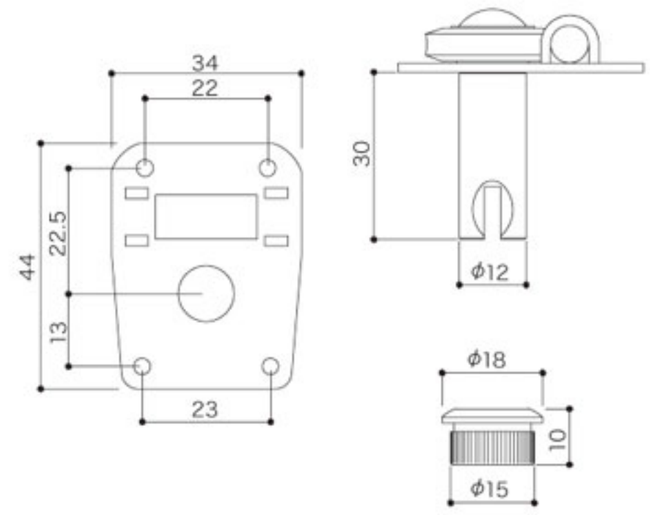

GB2

Head Type	
Finishes	N. GG. B. CK
Gear ratio	1 : 26

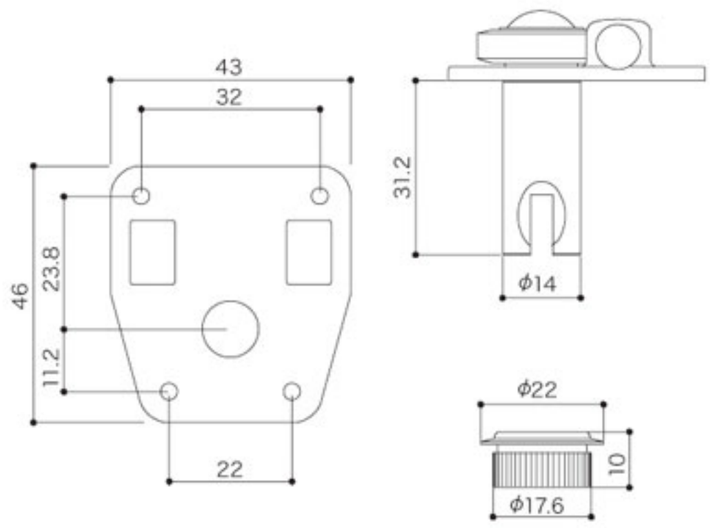

GB29

Head Type	
Finishes	N. GG. B. CK
Gear ratio	1 : 26

REVERSE WIND

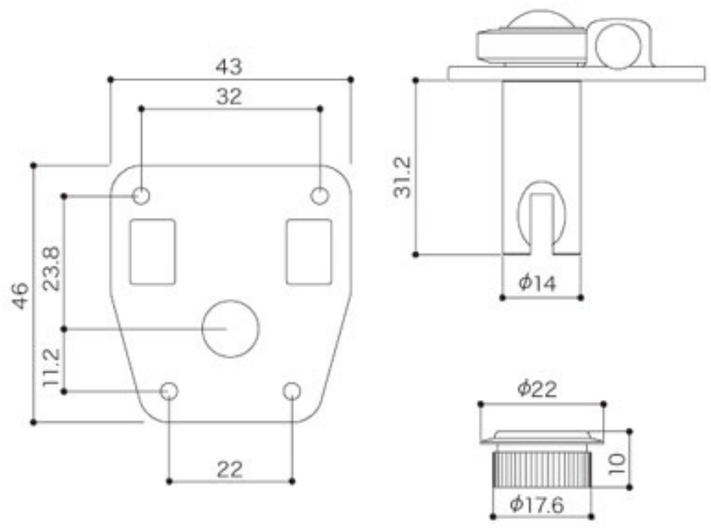

GB11W

Head Type	
Finishes	C. GG. B. CK
Gear ratio	1 : 20

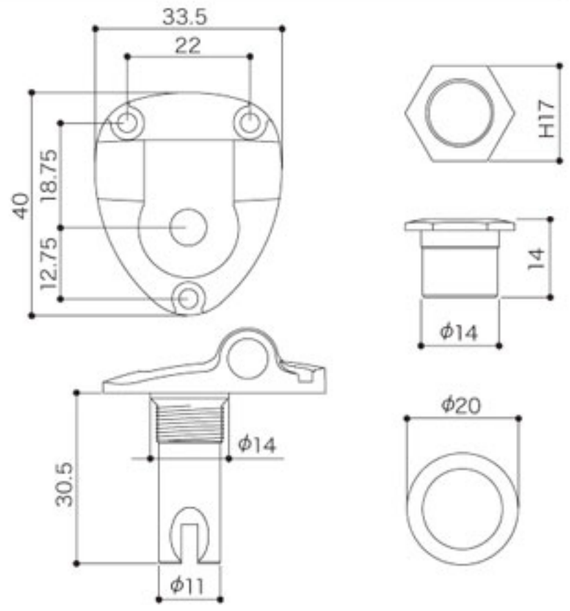

FB30

Head Type	
Finishes	N. GG. B. CK
Gear ratio	1 : 20

*Addtional improvement :
"Friction-Free Ring" was added to the inside.

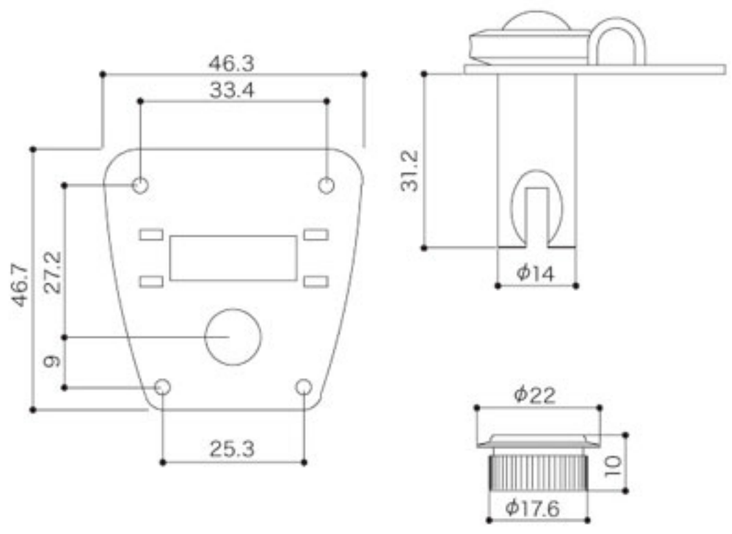

Finishes : **N** (Nickel), **C** (Chrome), **GG** (Gold), **B** (Black Chrome), **CK** (Cosmo Black)

STEALTH

The world's smallest Tuning-key

For Electric Guitar, Acoustic Guitar and Ukulele

Contributes to the possibility of musical instrument design.

ST31

Head Type	
String Post	ST31, STM31, STP31 STS31, STV31
Finishes	C. GG. CK
Gear ratio	1 : 18 Micro worm gear
e.g.	ST31-SB2 STP31-SB3 STM31-SB5L

GOTOH STEALTH-Key pat.p

ST31
(Chrome)

STP31
(Gold)

STS31
(Cosmo Black)

2x SPEED MAGNUM

Example of layout

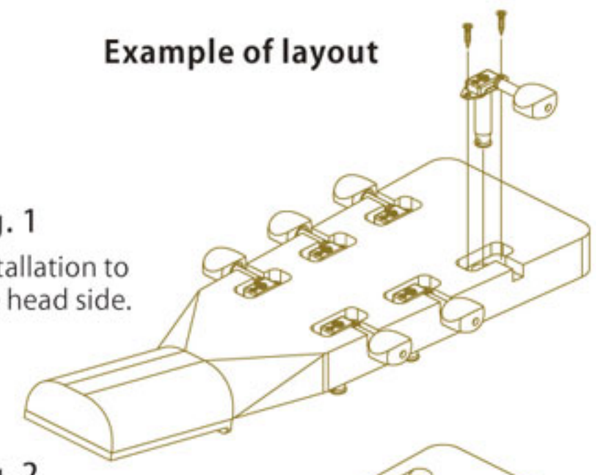

Fig. 1
Installation to the head side.

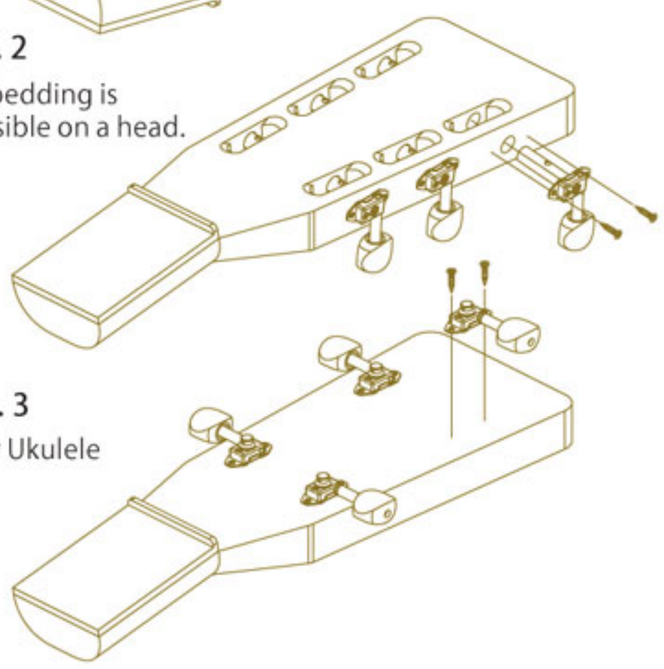

Fig. 2
Embedding is possible on a head.

Fig. 3
*For Ukulele

The smallest size and lightest weight.

- 1/3 to 1/2 the weight compared to that of an ordinary guitar machine heads. (11 to 12 grams each for original aluminum buttons and standard post.)

High precision

- A gear ratio of 18:1 with micro-worm gear inside for smooth tuning.

Function

- A choice of tuner posts and buttons means they are suitable for use on electric guitars, acoustic guitars, ukuleles, etc. (String tension must be under 20kgs. [44lbs])
- The post can be fitted from the upper face of the cover (side with the GOTOH logo on), please refer to fig.3 (String tension must be under 10kg. [22lbs])
- A wide variety of new layouts for instruments are now feasible, such as embedding in the headstock of the instrument, installing on the front of the headstock, or from the side of the headstock, greatly extending the range of what's possible. * Refer to Figs. 1, 2 and, 3
- The button and torque adjustment screw incorporates a locking mechanism. It is unlikely to loosen even after prolonged use. Though, with wear on the washer, loosening may occur, so adjustment is required..

Ecology

- For the sake of the environment it is important to reduce the use of raw materials. STEALTH keys contain 1/3 to 1/2 the amount of material compared to ordinary keys.

String Post Dimensions

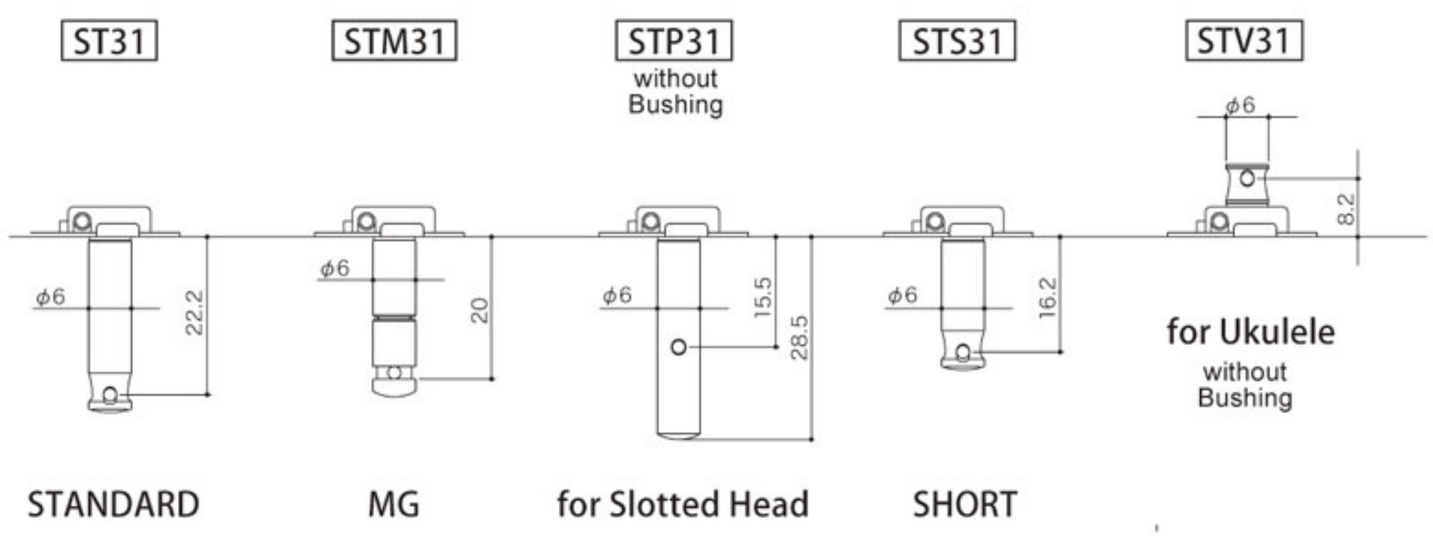

STEALTH Key Detailed Dimension

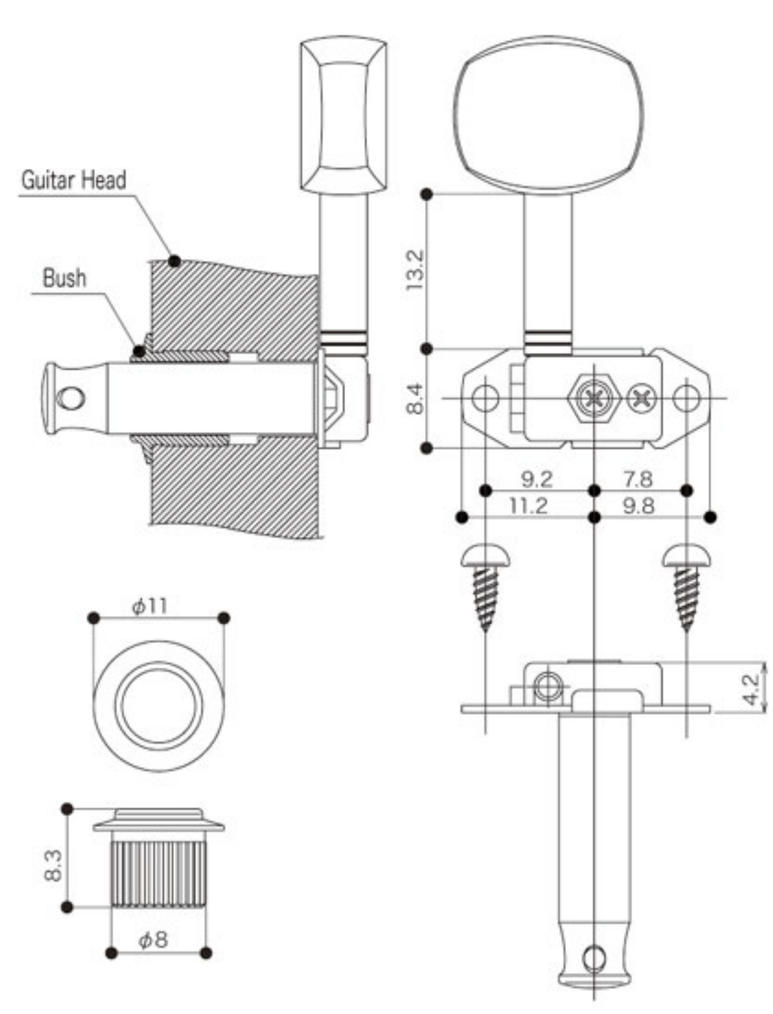

STEALTH Key BUTTON OPTION

Choose the button from listed below when order for machine head is placed. (actual size ratio : about 50%)
A button material is aluminum.

SB2

SB3

SB4

SB5

Finishes : C (Chrome), **GG** (Gold), **CK** (Cosmo Black)

Tremolo 510 Series

510 T series does not follow conventional vintage style, but instead pursues the goal of greater tremolo functionality. It has a low clearance arm system of our own design. To guarantee a strong and hard-wearing tremolo blade, extremely resilient chromium molybdenum steel was adopted for the plate. It's finished with high-grade heat treatment and precision machining. There are a 6 pivot point type, the same as the synchronized style and a 2 pivot point anchor nut type, which incorporates stud lock (PAT.)* In addition, GOTOH's original FST feature (PAT.) between the saddle and ball end, keeps the strings from touching the plate. Because of them, the unit's ability to return to tune when using the tremolo arm is significantly improved.
The 510TS comes with the popular steel block as standard.

EV510T-BS
EV510TS-BS

Finishes	C. GG. B. CK. XN. XC. XG

BRASS SADDLE
STRING SPACING 10.8MM
STUD LOCK-PAT.

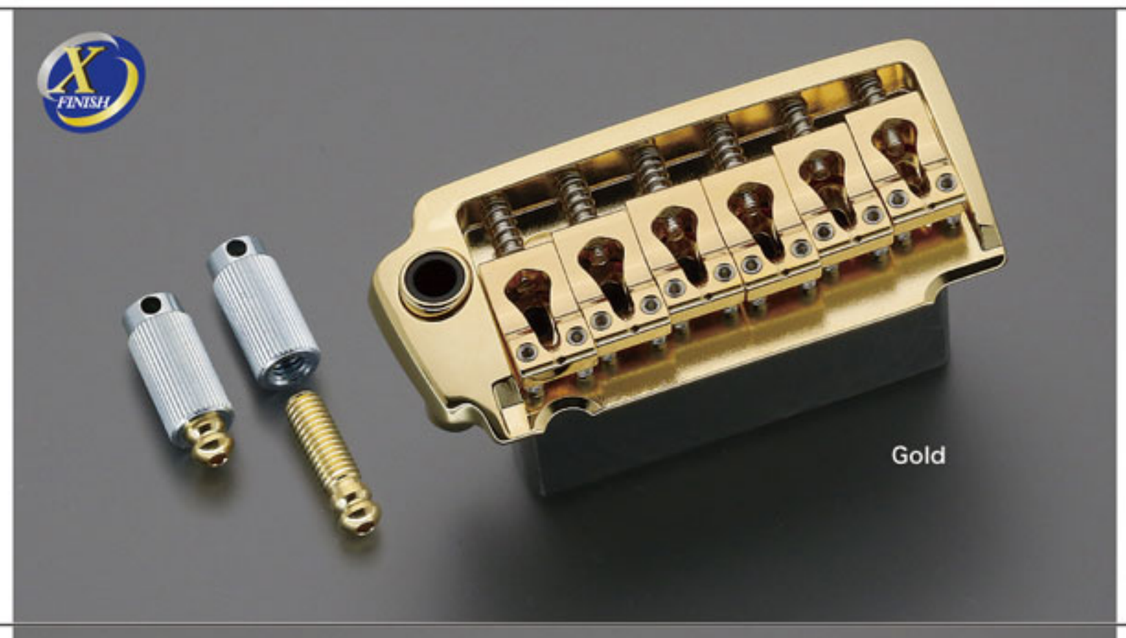

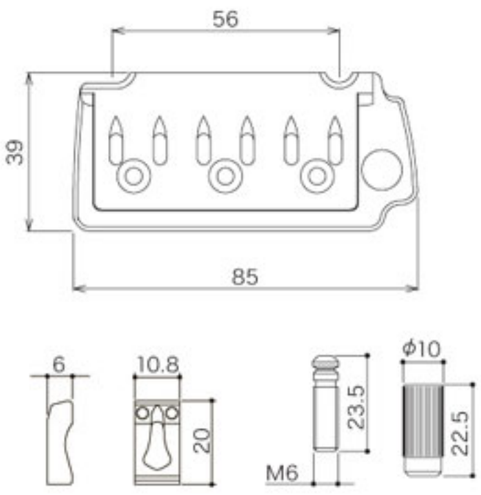

EV510T-FE
EV510TS-FE

Finishes	C. GG. B. CK. XN. XC. XG

STEEL SADDLE
STRING SPACING 10.8MM
STUD LOCK-PAT.

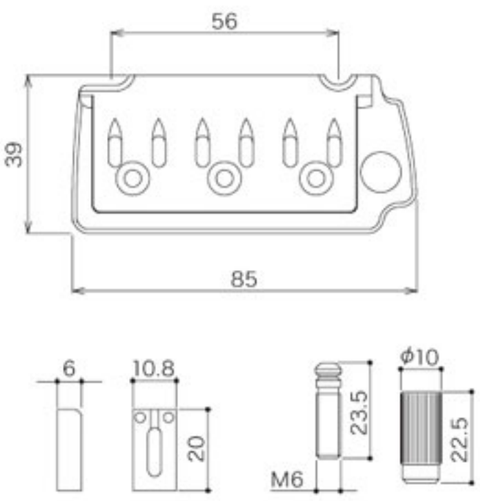

NS510T-FE1
NS510TS-FE1

Finishes	C. GG. B. CK

STEEL SADDLE
STRING SPACING 10.5MM
STUD LOCK-PAT.

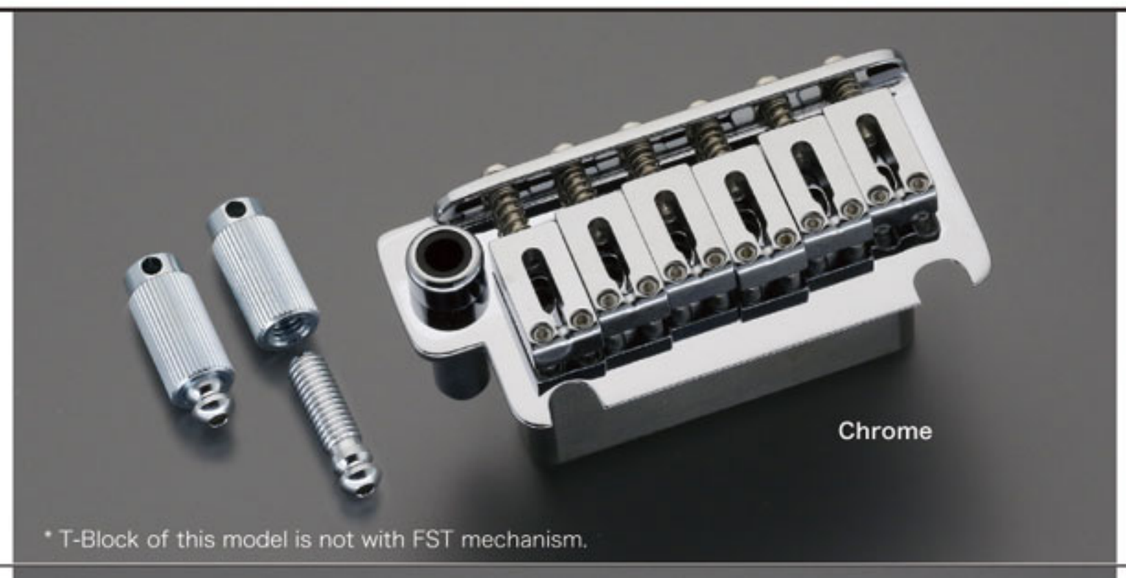

* T-Block of this model is not with FST mechanism.

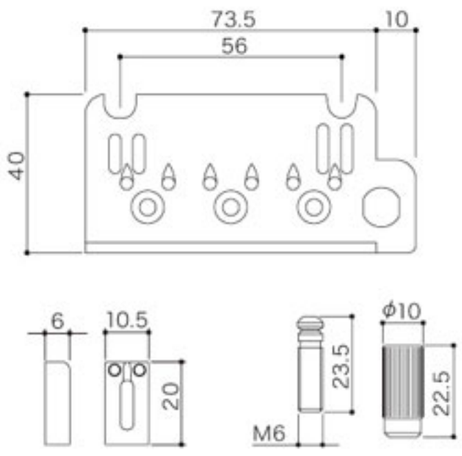

NS510T-FE2
NS510TS-FE2

Finishes	C. GG. B. CK

STEEL SADDLE
STRING SPACING 10.5MM

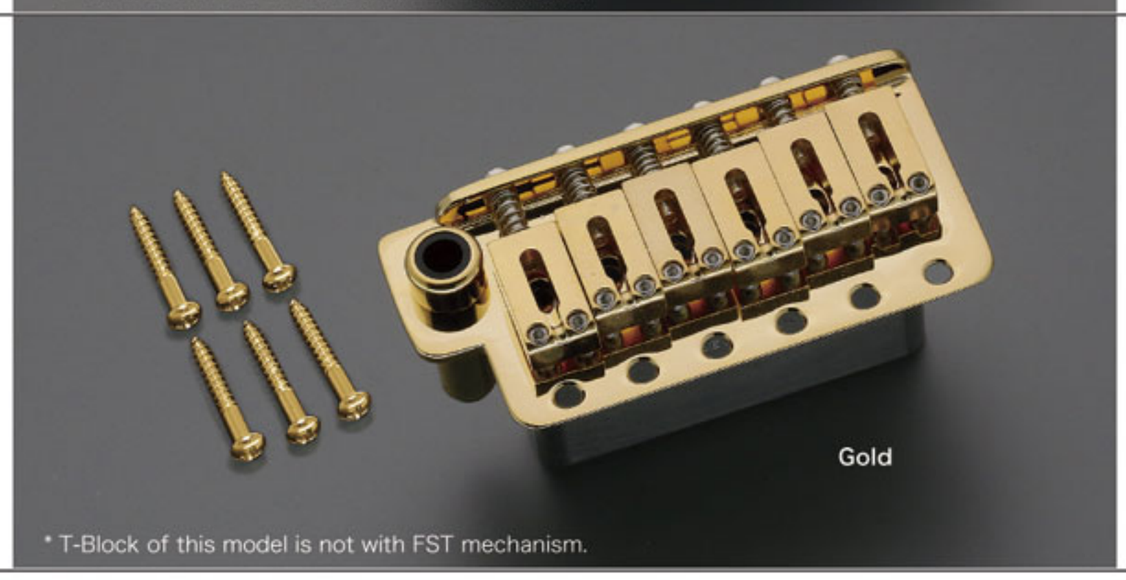

* T-Block of this model is not with FST mechanism.

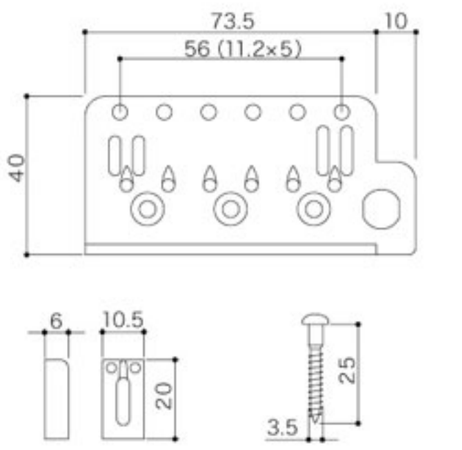

510T Block

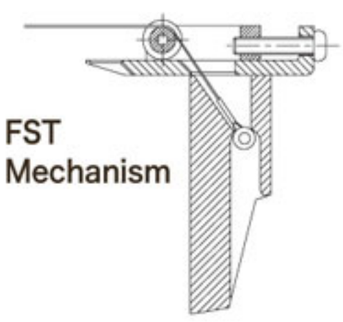

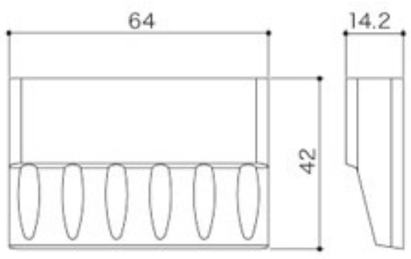

* NS510 is not with FST mechanism.

510TS Block

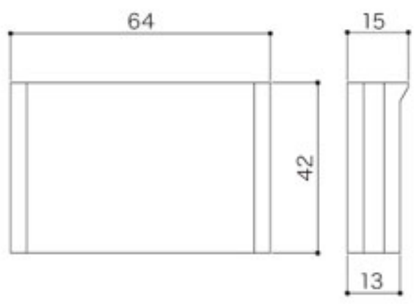

* 510TS features a Steel block, not FST function.

Finishes : C (Chrome), **GG** (Gold), **B** (Black Chrome), **CK** (Cosmo Black), **XN** (X-Nickel), **XC** (X-Chrome), **XG** (X-Gold)

510T-BS1
510TS-BS1

Finishes	C. GG. B. CK

BRASS SADDLE
STRING SPACING 10.8MM
STUD LOCK-PAT.

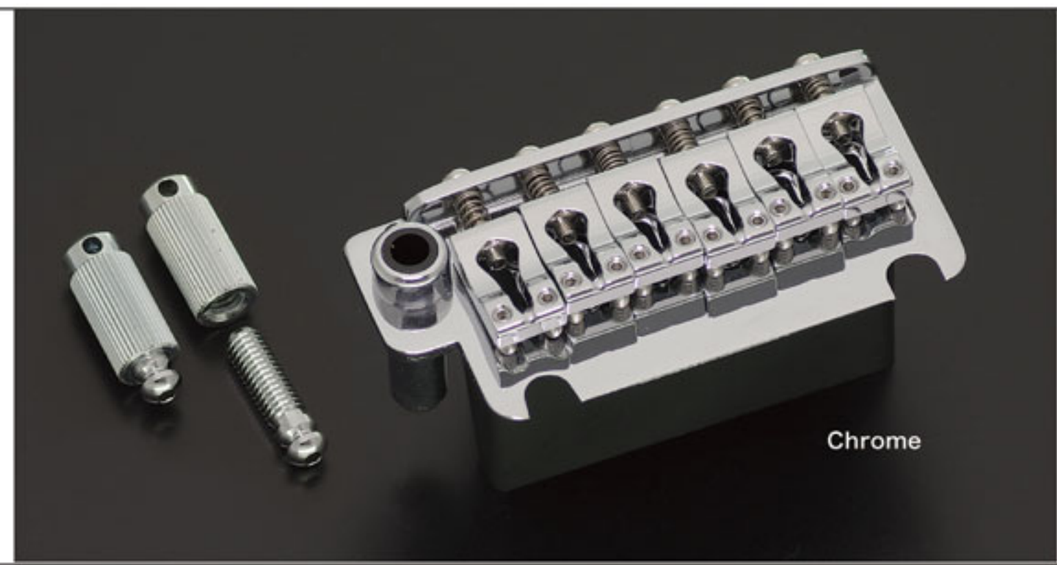

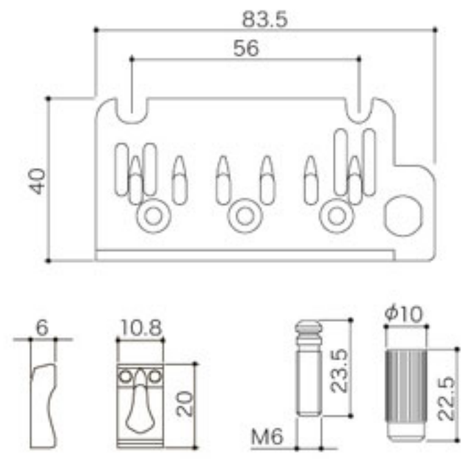

510T-FE1
510TS-FE1

Finishes	C. GG. B. CK

STEEL SADDLE
STRING SPACING 10.8MM
STUD LOCK-PAT.

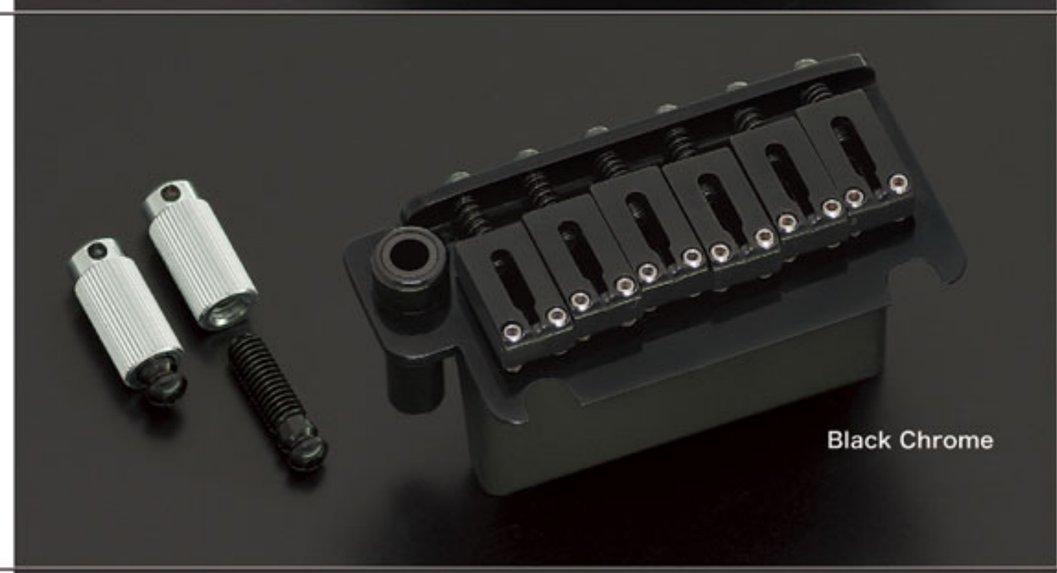

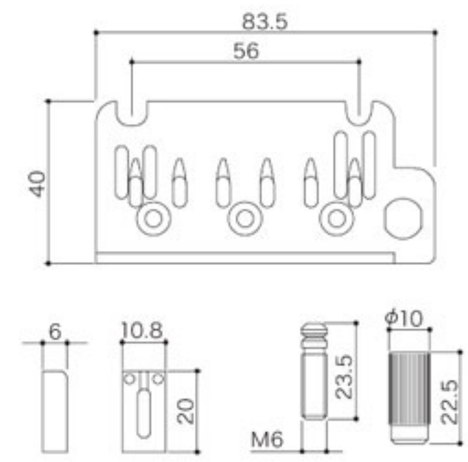

510T-SF1
510TS-SF1

Finishes	C. GG. B. CK

STEEL SADDLE (SHEET METAL)
STRING SPACING 10.8MM
STUD LOCK-PAT.

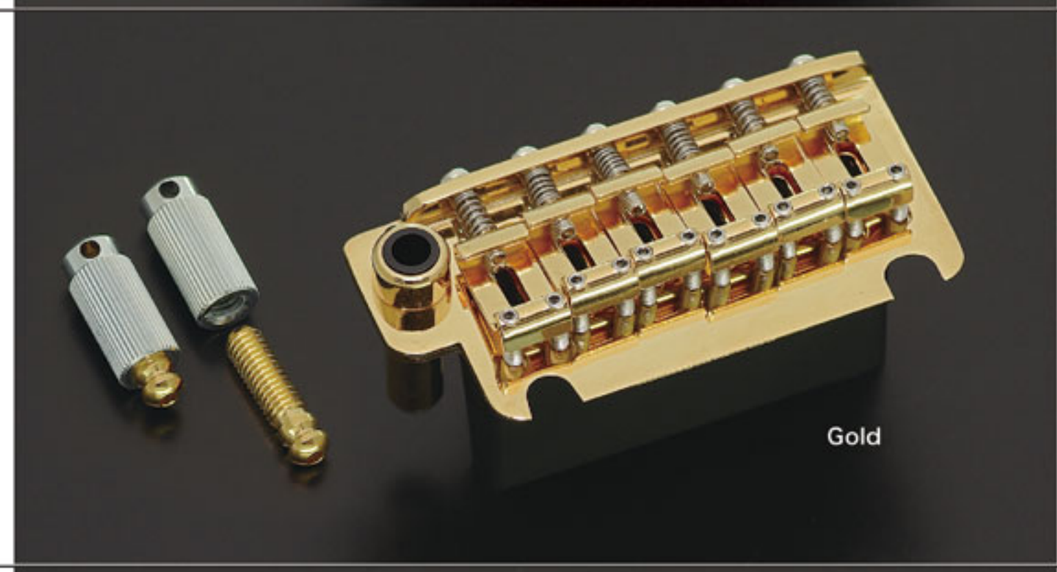

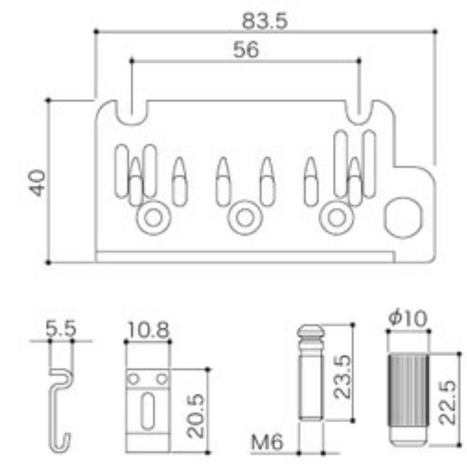

510T-BS2
510TS-BS2

Finishes	C. GG. B. CK

BRASS SADDLE
STRING SPACING 10.8MM

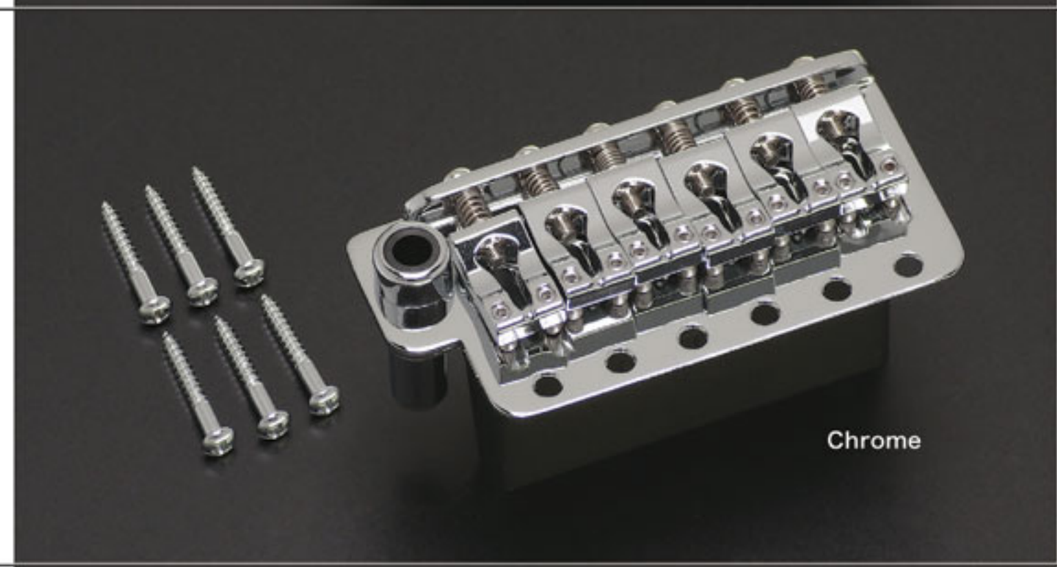

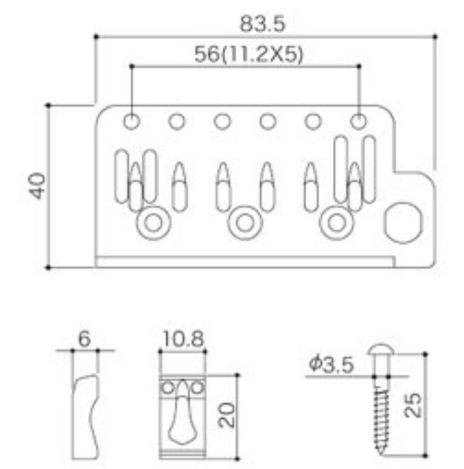

510T-FE2
510TS-FE2

Finishes	C. GG. B. CK

STEEL SADDLE
STRING SPACING 10.8MM

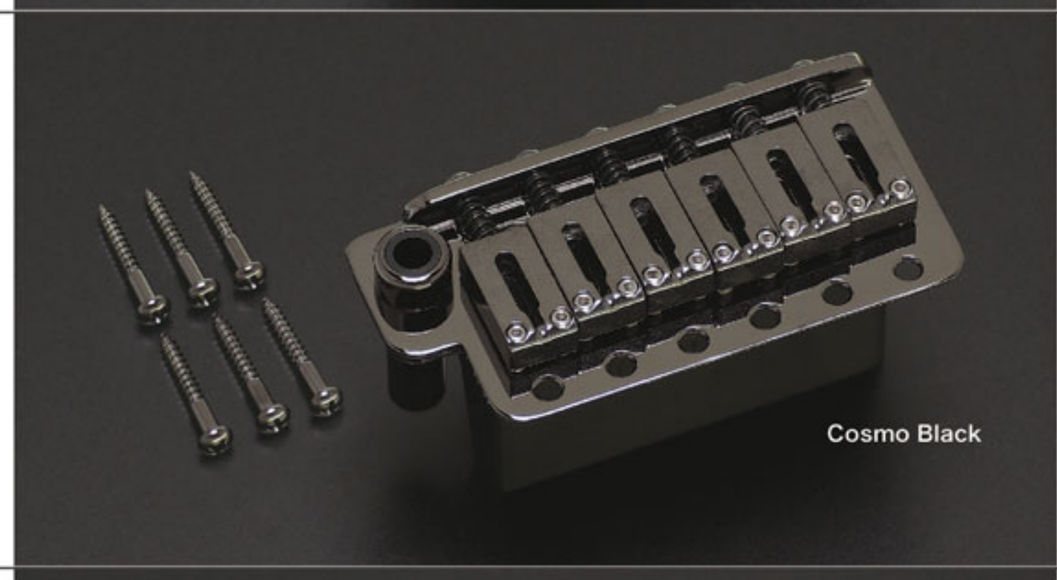

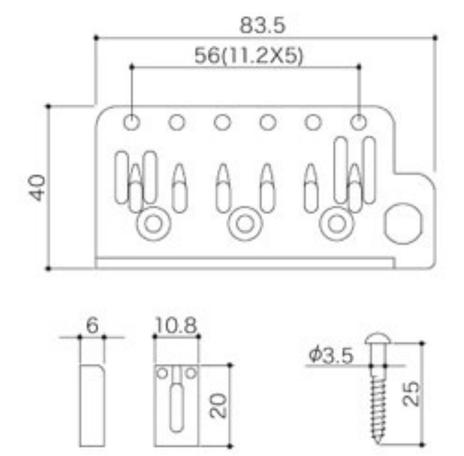

510T-SF2
510TS-SF2

Finishes	C. GG. B. CK

STEEL SADDLE (SHEET METAL)
STRING SPACING 10.8MM

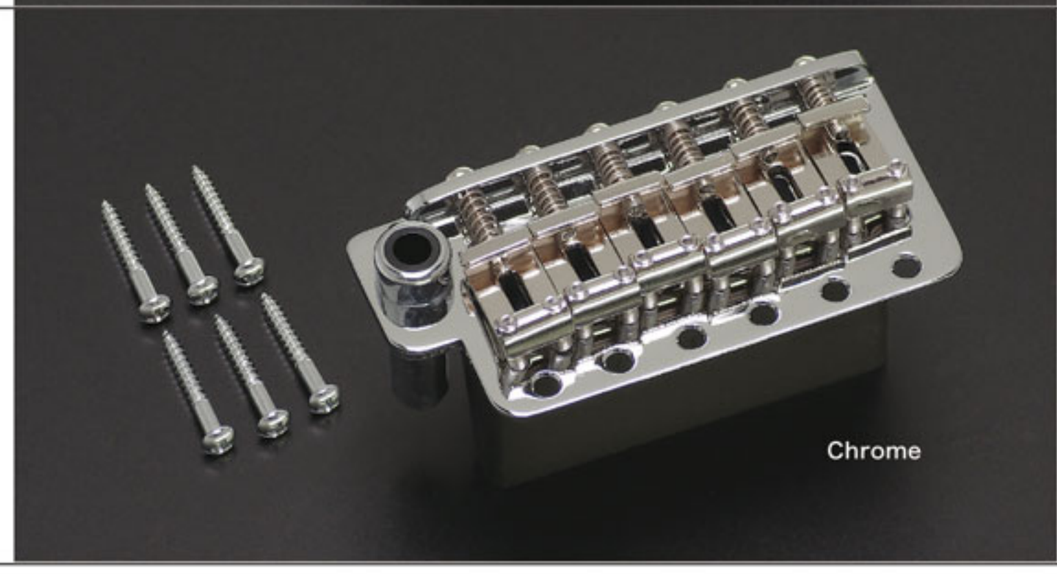

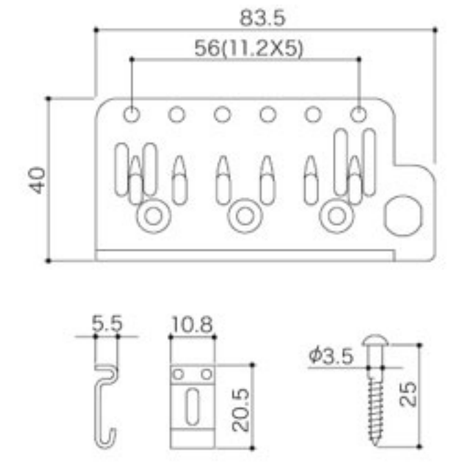

Tremolo Units & Lock Nuts

GE1996T

Finishes	C. GG. B. CK
Block Height	33mm. 36mm. 40mm

SPECIALLY PROCESSED
STEEL SADDLE,
STRING SPACING 10.8MM
STUD LOCK-PAT.

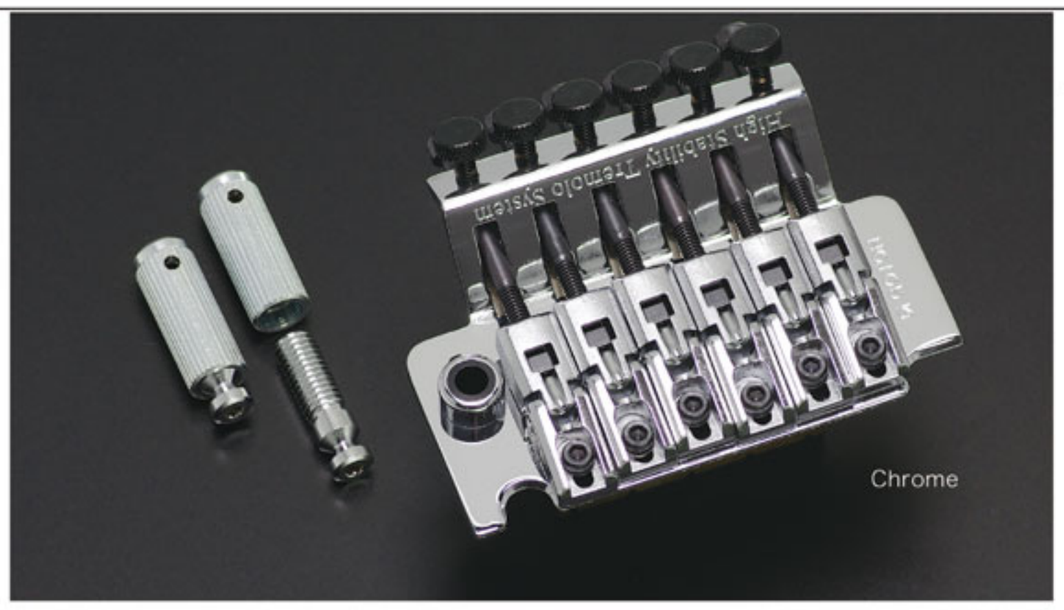

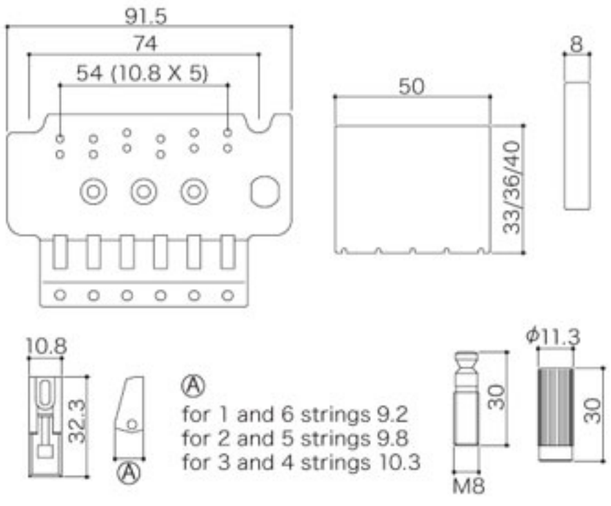

FGR-1
FGR-2

Finishes	C. GG. B. CK

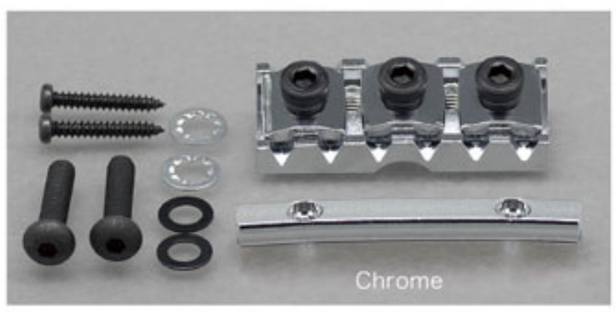

FGR-1

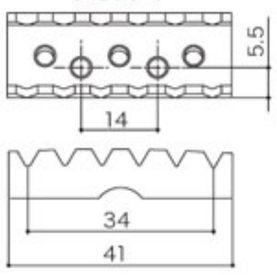

FGR-2

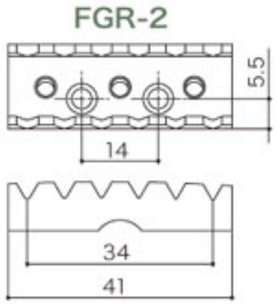

GHL-1
GHL-2

Finishes	C. GG. B. CK

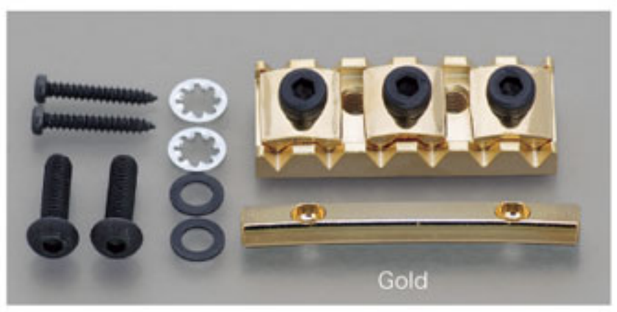

GHL-1

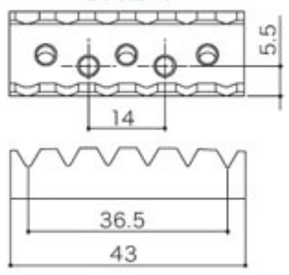

GHL-2

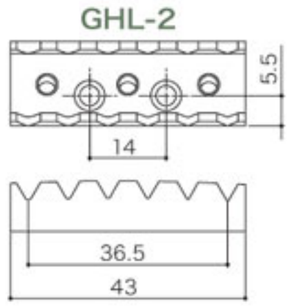

GE101T

Finishes	C. GG. B. CK

STEEL SADDLE (SHEET METAL),
STRING SPACING 11.3MM

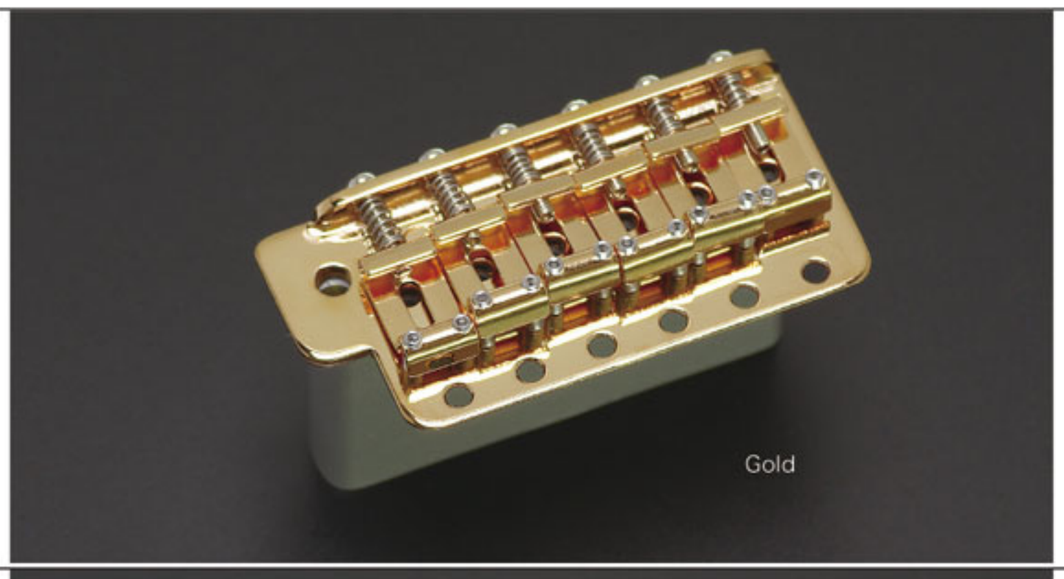

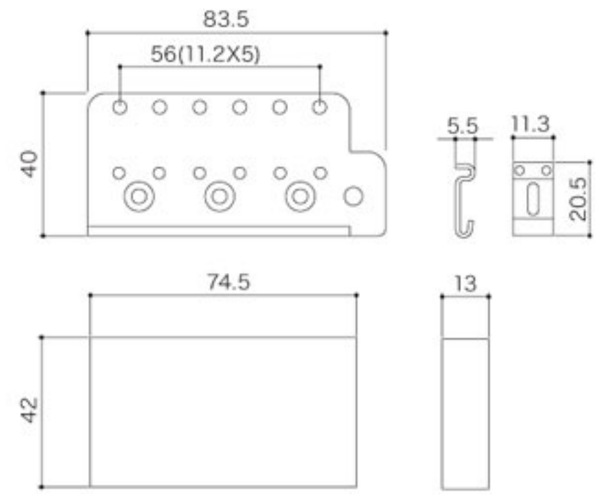

GE102T

Finishes	C. GG. B. CK

STEEL SADDLE,
STRING SPACING 11.3MM

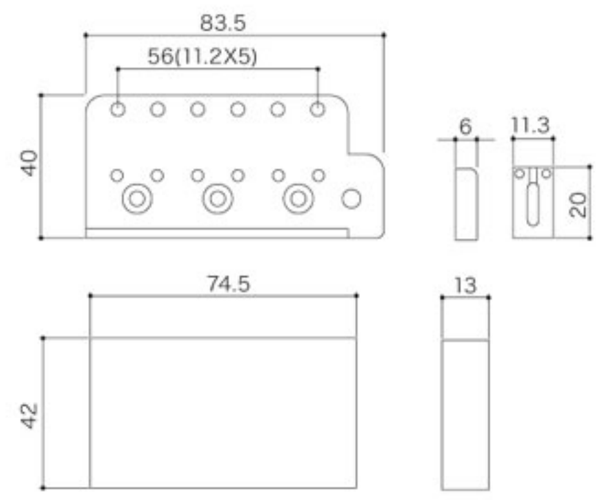

GE101TS

Finishes	C. GG. B. CK

STEEL BLOCK,
STEEL SADDLE(SHEET METAL)
WITH U.S.A. THREADS SCREWS,
STRING SPACING 11.3MM

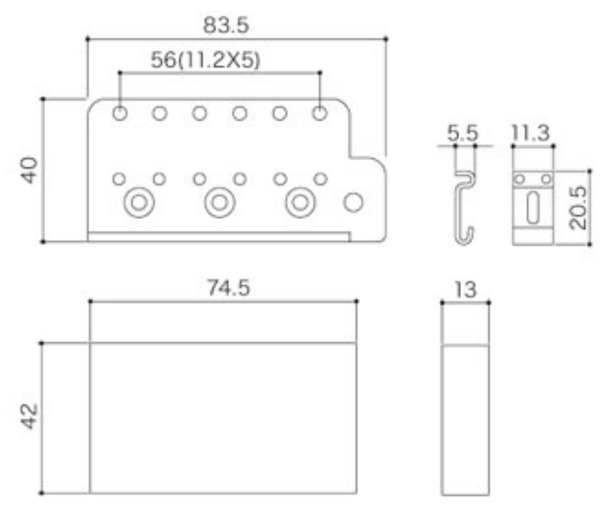

Finishes : C (Chrome), **GG** (Gold), **B** (Black Chrome), **CK** (Cosmo Black)

Wilkinson made from GOTOH has a hallmark of "by G-GOTOH"

VS100N

Finishes	HC. HG. HB. HCK

STRING SPACING : 10.8MM
STUD LOCK-PAT.

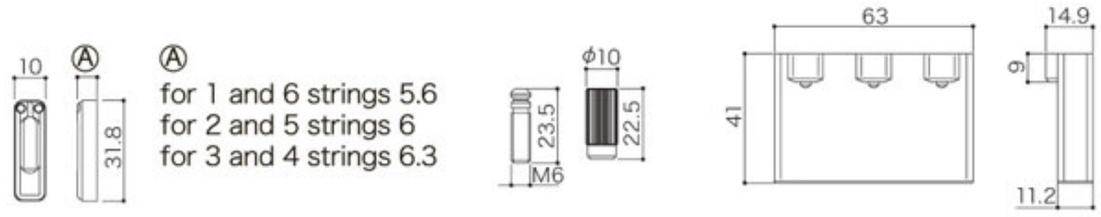

VG300

Finishes	C. GG. B. CK

STRING SPACING : 10.8MM
STUD LOCK-PAT.

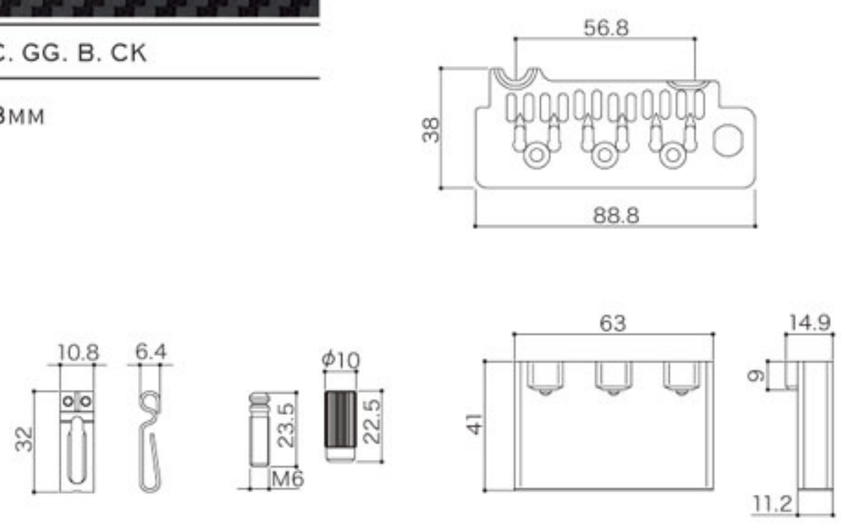

VSVG

Finishes	N. GG. B. CK

STRING SPACING : 10.8MM

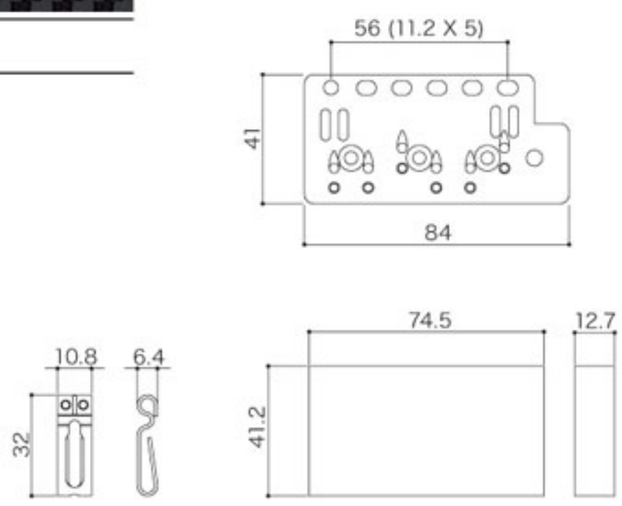

WT3

Finishes	N. C. GG (PLATE ONLY)

STRING SPACING : 10.8MM

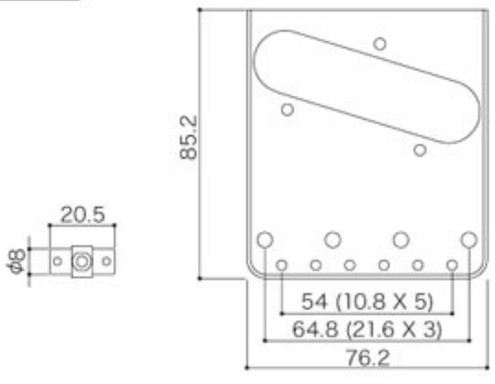

Finishes : N (Nickel), **C** (Chrome), **GG** (Gold), **B** (Black Chrome), **CK** (Cosmo Black), **HC** (Honed Chrome), **HG** (Honed Gold), **HB** (Honed Black Chrome), **HCK** (Honed Cosmo Black)

510 Series

510UB

Finishes	C. GG. B. CK. XN. XC. XG

HARD ZINC SADDLE
STUD LOCK-PAT.

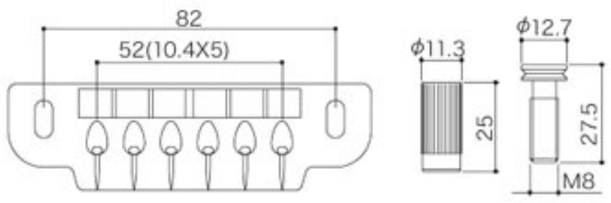

510FA

Finishes	C. GG. B. CK. XN. XC. XG

MATERIAL / ALUMINUM
STUD LOCK-PAT.

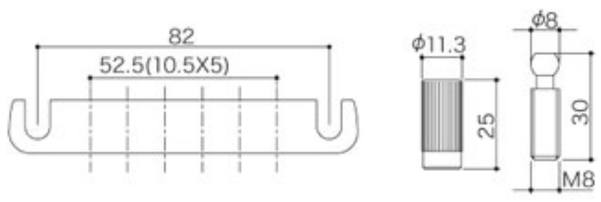

510FB

Finishes	C. GG. B. CK. XN. XC. XG

BRASS SADDLE
STUD LOCK-PAT.

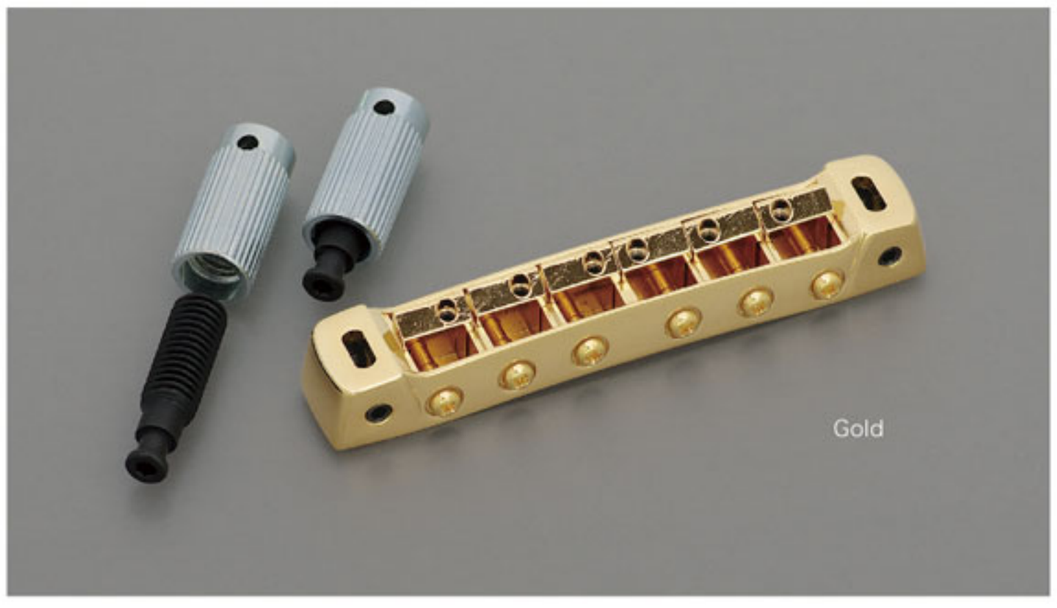

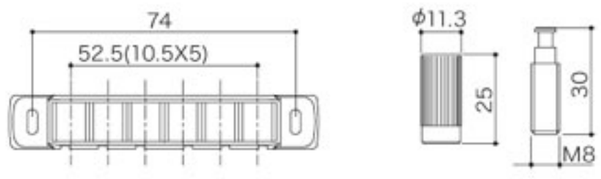

Finishes : C (Chrome), **GG** (Gold), **B** (Black Chrome), **CK** (Cosmo Black), **XN** (X-Nickel), **XC** (X-Chrome), **XG** (X-Gold)

Guitar Bridges & Tailpieces

GTC101

Finishes	C. GG. B. CK

BRASS SADDLE
STRING SPACING 10.5MM

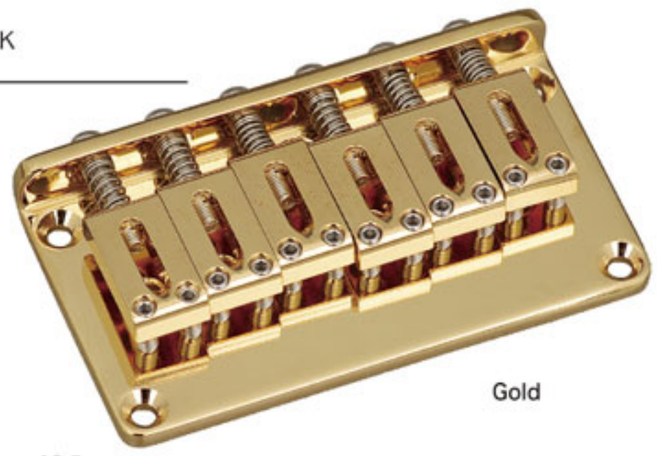

Gold

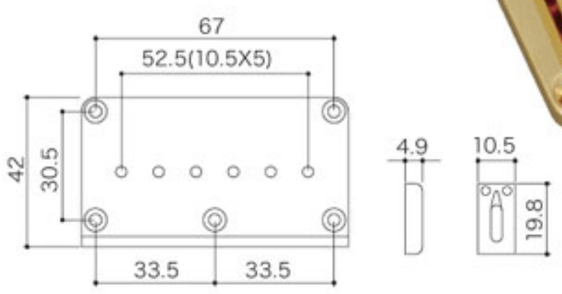

GTC102

Finishes	C. GG. B. CK

STEEL SADDLE
STRING SPACING 10.5MM

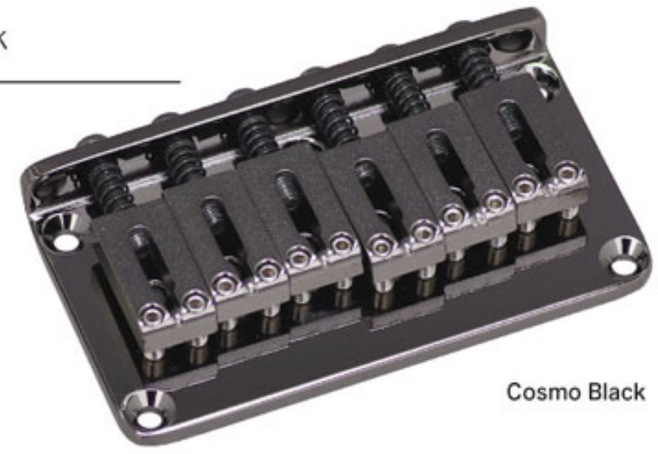

Cosmo Black

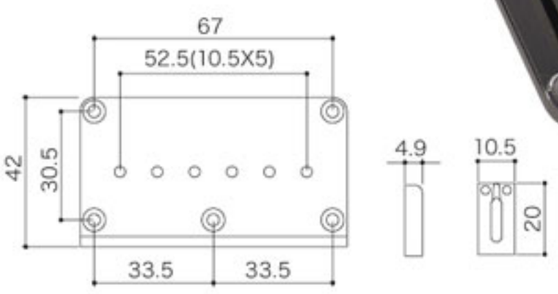

GTC201

Finishes	C. GG. B. CK

BRASS SADDLE
STRING SPACING 10.8MM

Black Chrome

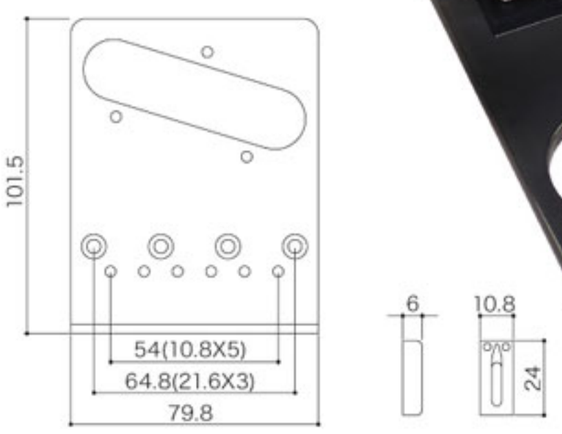

GTC202

Finishes	C. GG. B. CK

STEEL SADDLE
STRING SPACING 10.8MM

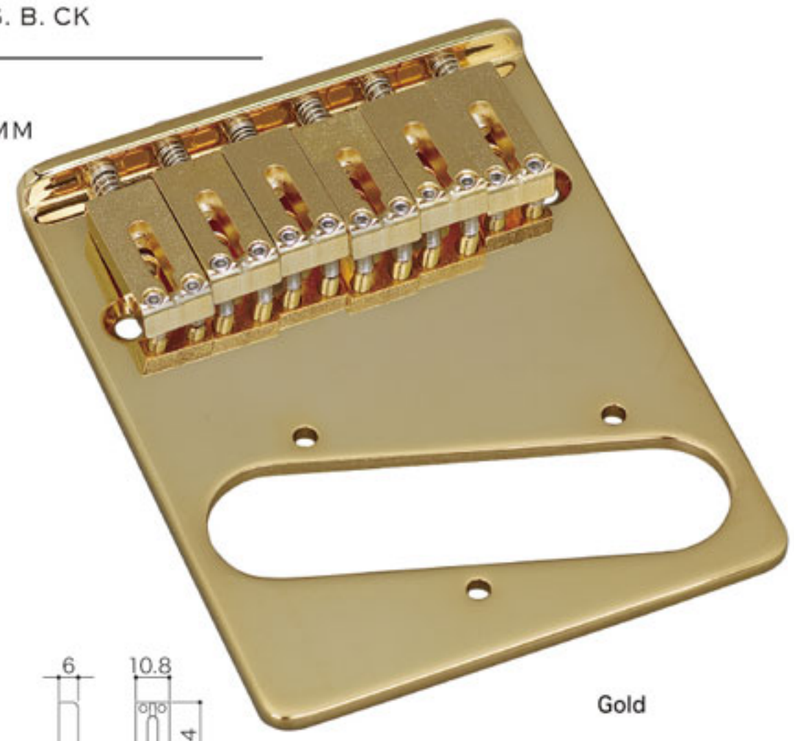

Gold

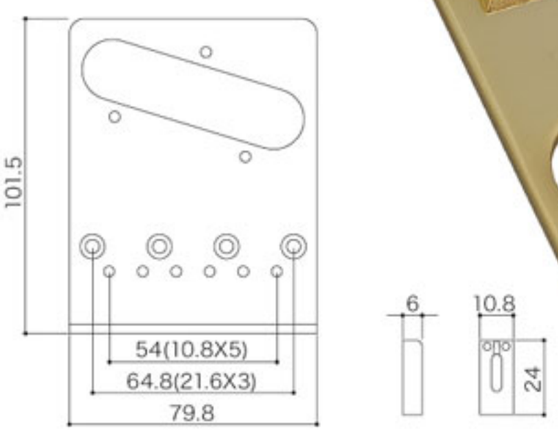

GTC12

Finishes	C. GG. B. CK

HARD ZINC SADDLE
STRING SPACING 10.5MM
FOR 12-STRINGS

Chrome

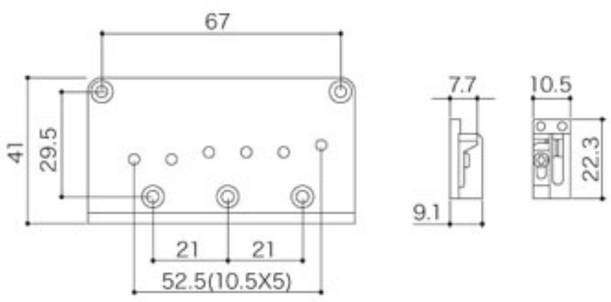

GE101Z

Finishes	N. C. GG. B. CK
Material	ZINC DIECAST

Gold

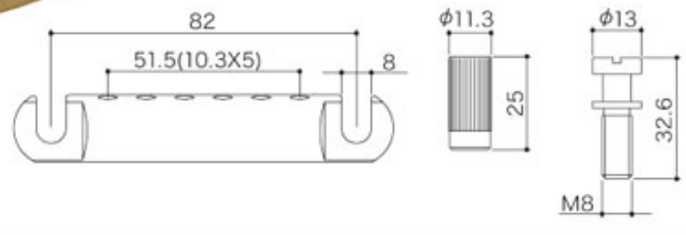

GE101Z-T

Finishes	N. C. GG. B. CK
Material	ZINC DIECAST

Chrome

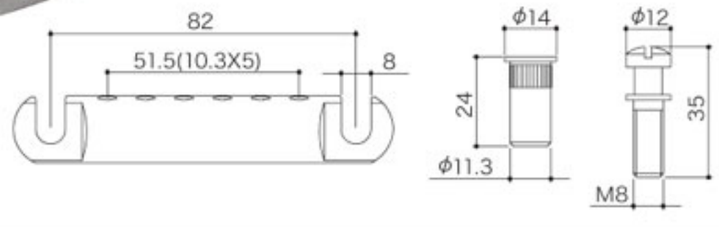

Finishes : **N** (Nickel), **C** (Chrome), **GG** (Gold), **B** (Black Chrome), **CK** (Cosmo Black)

GE101A

Finishes	N. C. GG. B. CK
Material	ALUMINUM

Nickel

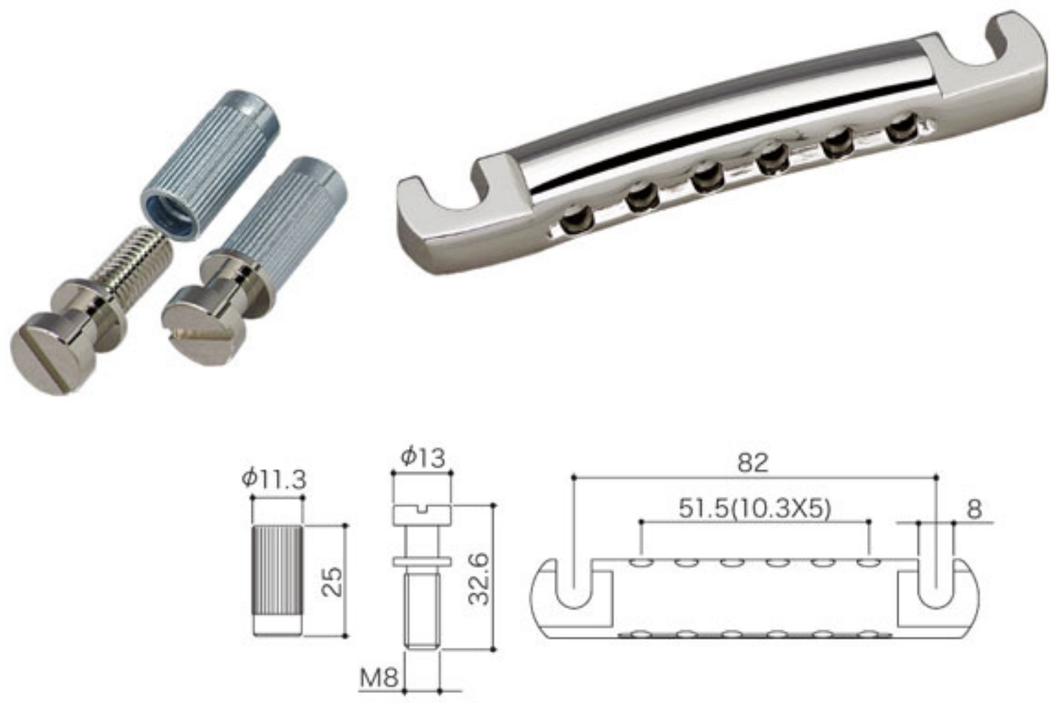

GE101A-T

Finishes	N. C. GG. B. CK
Material	ALUMINUM

Cosmo Black

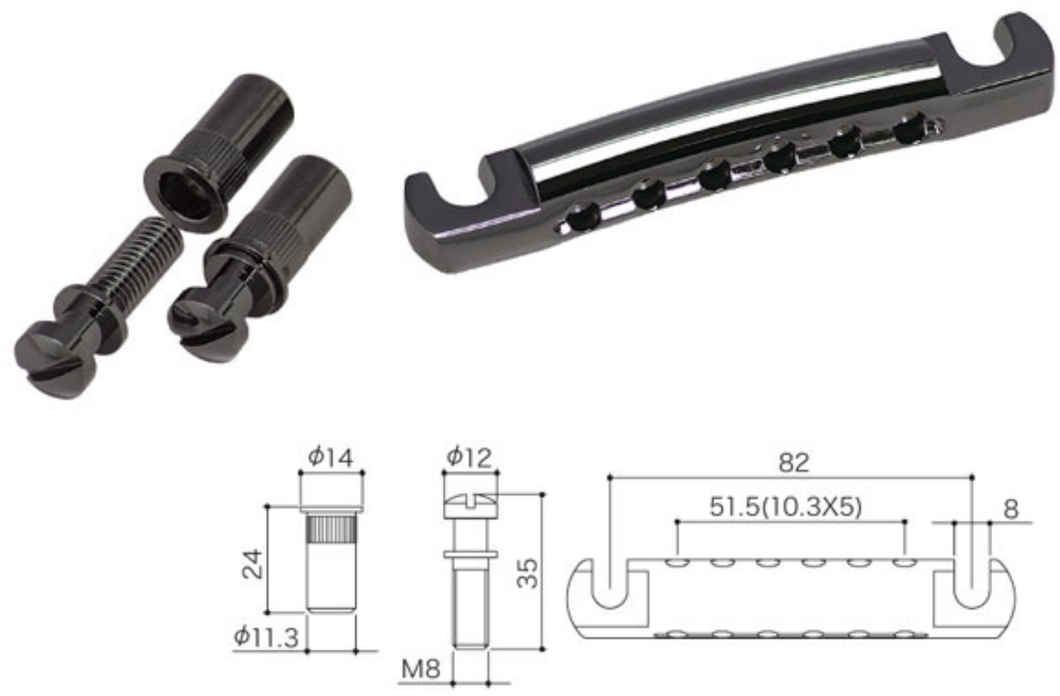

GE103B

Finishes	N. C. GG. B. CK

HARD ZINC SADDLE

Gold

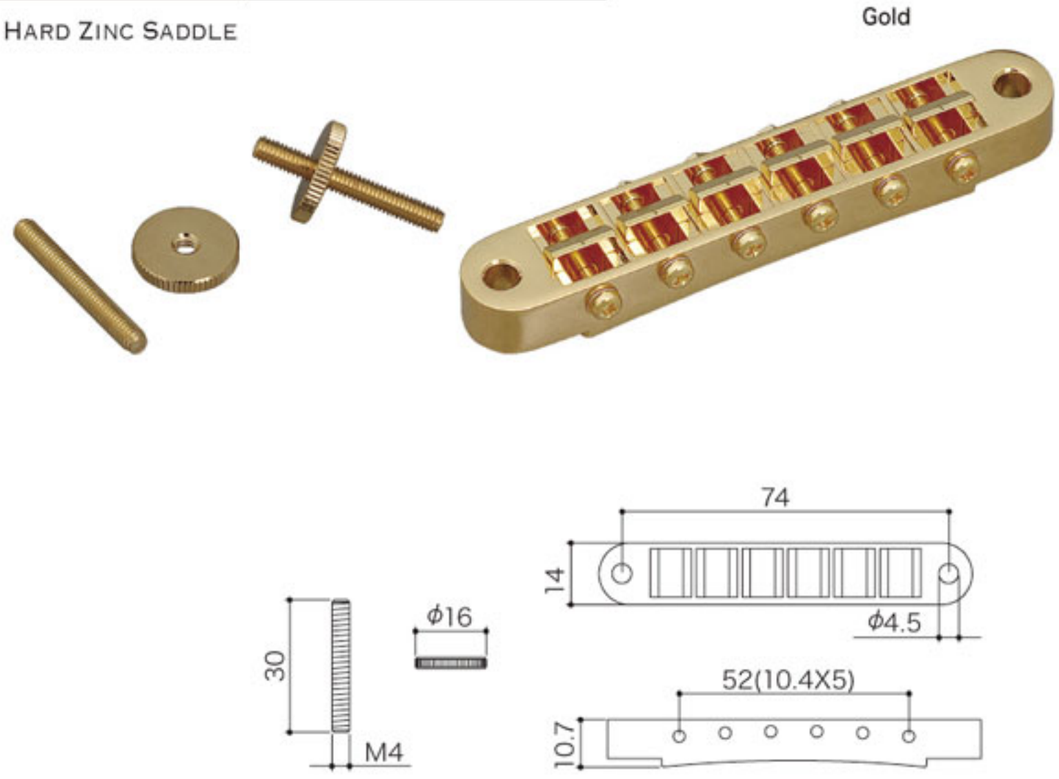

GE103B-T

Finishes	N. C. GG. B. CK

HARD ZINC SADDLE

Black Chrome

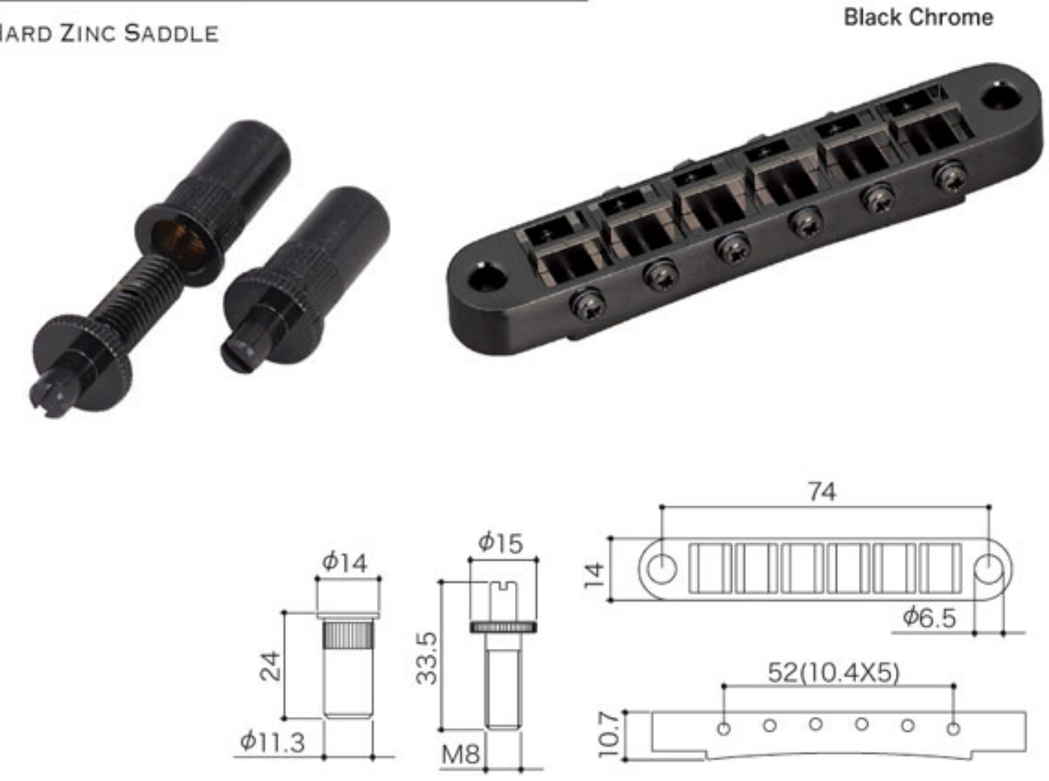

GE104B

Finishes	N. C. GG. B. CK

HARD ZINC SADDLE

Cosmo Black

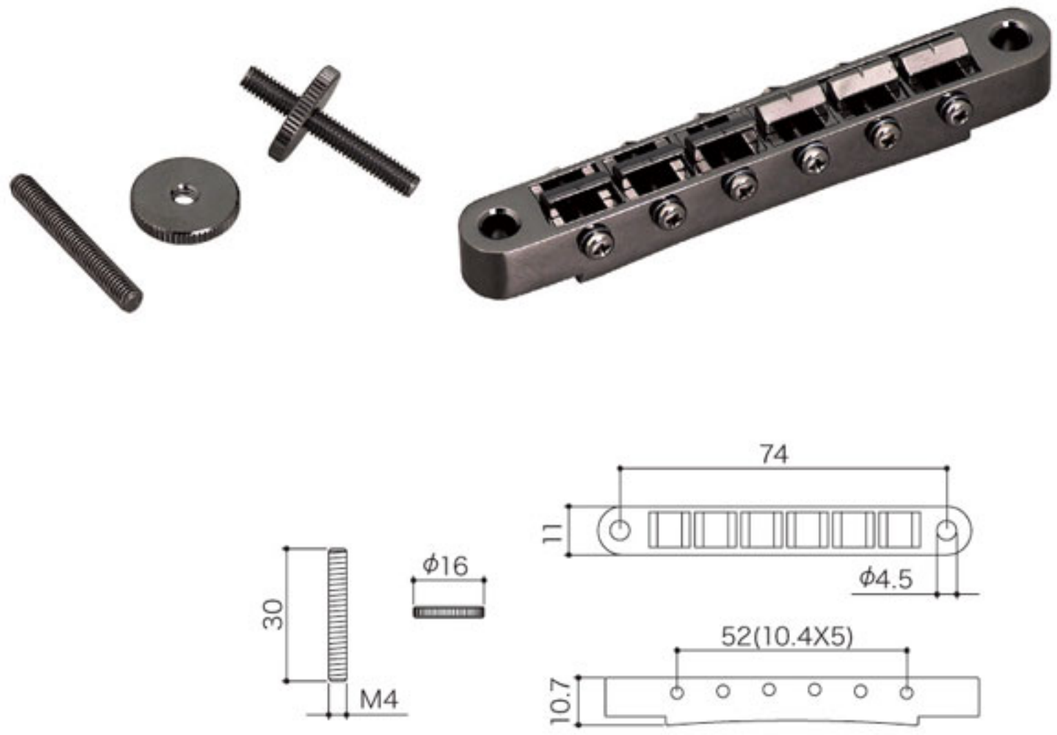

GEP104B

Finishes	N. C. GG. B. CK

PLASTIC SADDLE

Gold

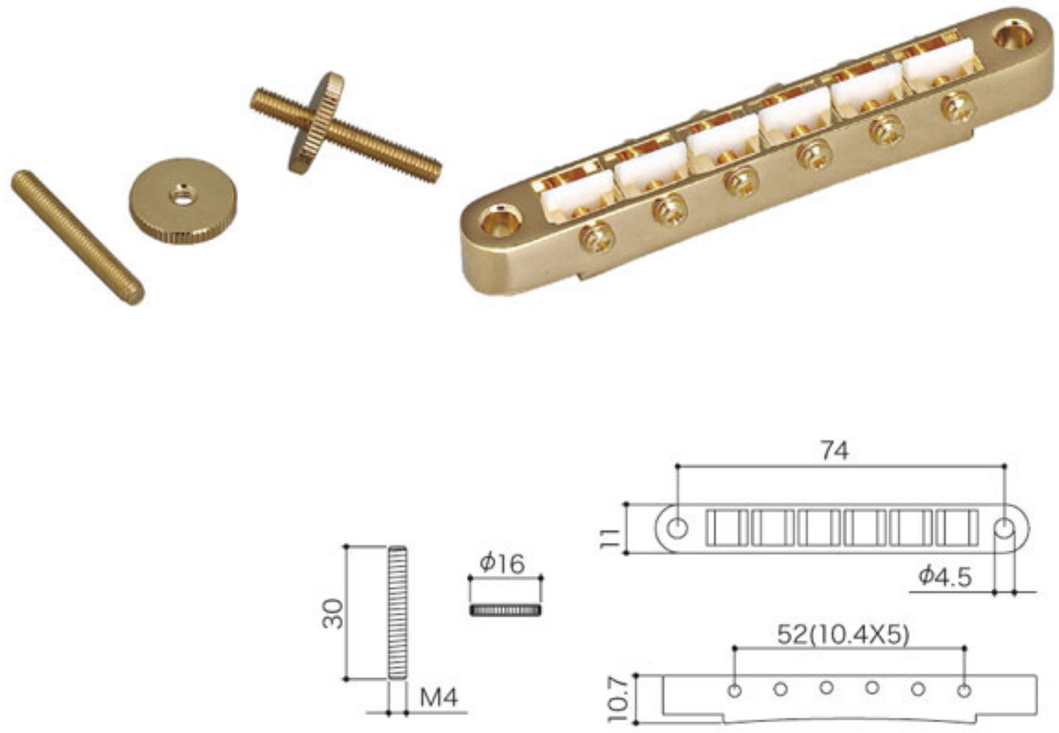

Finishes : N (Nickel), **C** (Chrome), **GG** (Gold), **B** (Black Chrome), **CK** (Cosmo Black)

Titanium Saddle Series

Ti103B

Finishes	N. C. GG. B. CK

TITANIUM SADDLE

Cosmo Black

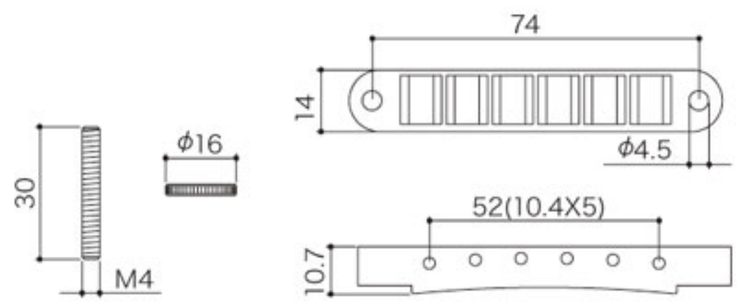

Ti103B-T

Finishes	N. C. GG. B. CK

TITANIUM SADDLE

Gold

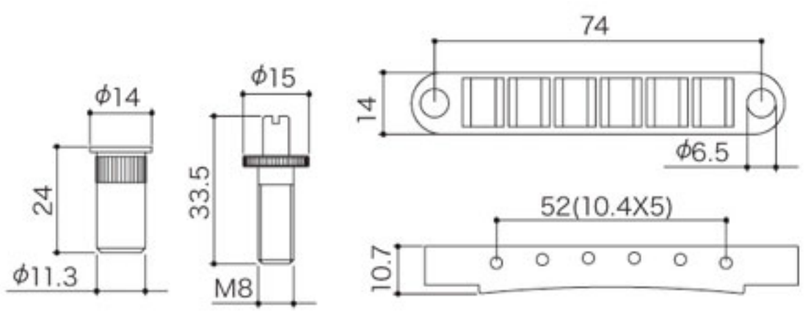

Ti104B

Finishes	N. C. GG. B. CK

TITANIUM SADDLE

Chrome

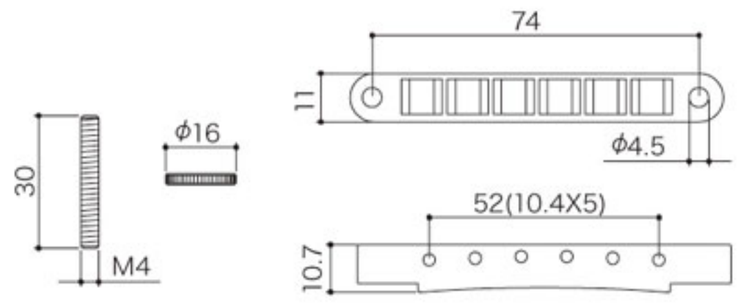

Finishes : N (Nickel), **C** (Chrome), **GG** (Gold), **B** (Black Chrome), **CK** (Cosmo Black)

"In-Tune" Saddle Series

PAT-P.

- Titanium Saddle and Brass Saddle -

What's "In-Tune" Saddle?

Gotoh's unique grooving on the "In-Tune" saddles results in more exact intonation compared to traditional vintage-style saddles. Each saddle is reversible and can be used in any position. Titanium construction for rich harmonic overtones and long sustain.
The brass saddle creates bright sound.
Gotoh is proud to announce the "In-Tune" saddle!

*Perfect octave tuning not guaranteed.

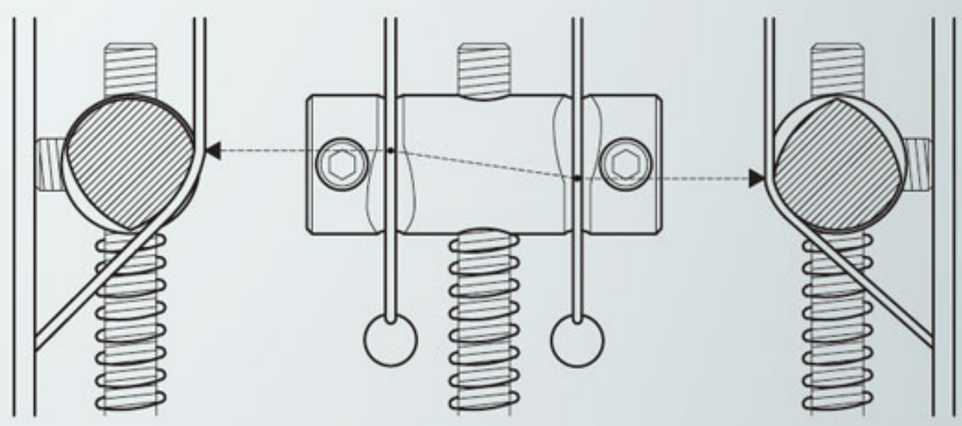

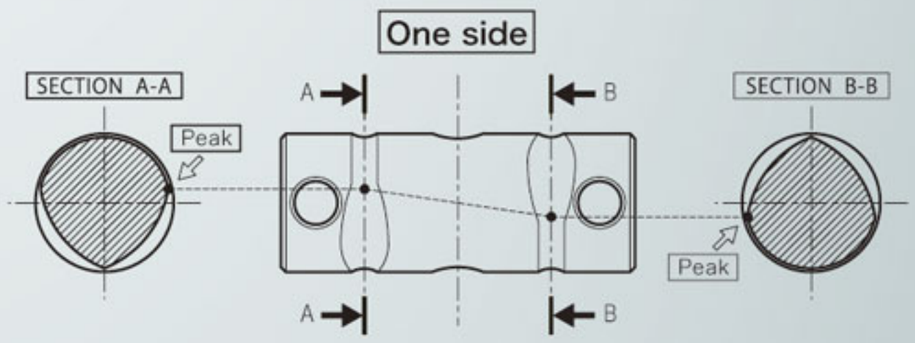

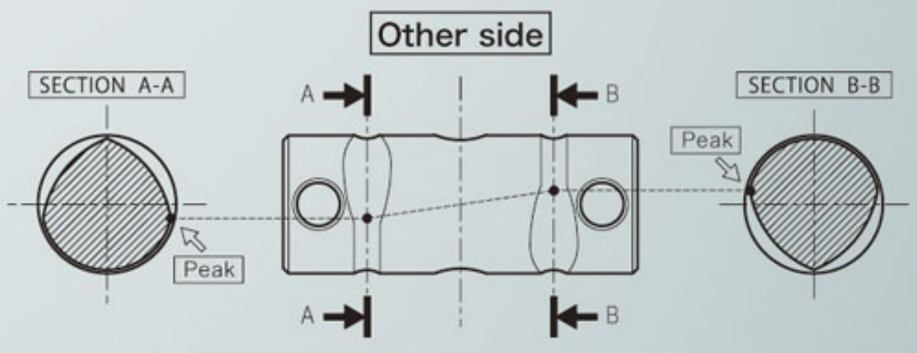

Ti-TC1

Finishes	N. C. GG (PLATE ONLY)

TITANIUM "IN-TUNE" SADDLE PAT-P.
STRING SPACING 10.8MM

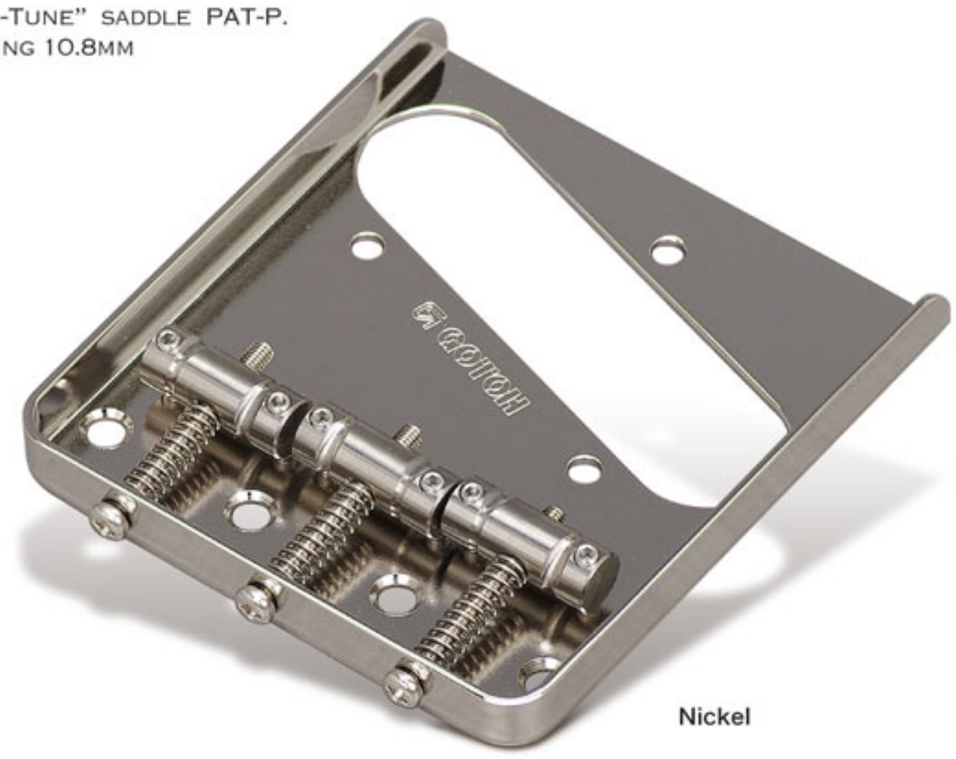

Nickel

Ti-TC1S

Finishes	N. C. GG (PLATE ONLY)

TITANIUM "IN-TUNE" SADDLE PAT-P.
STRING SPACING 10.8MM

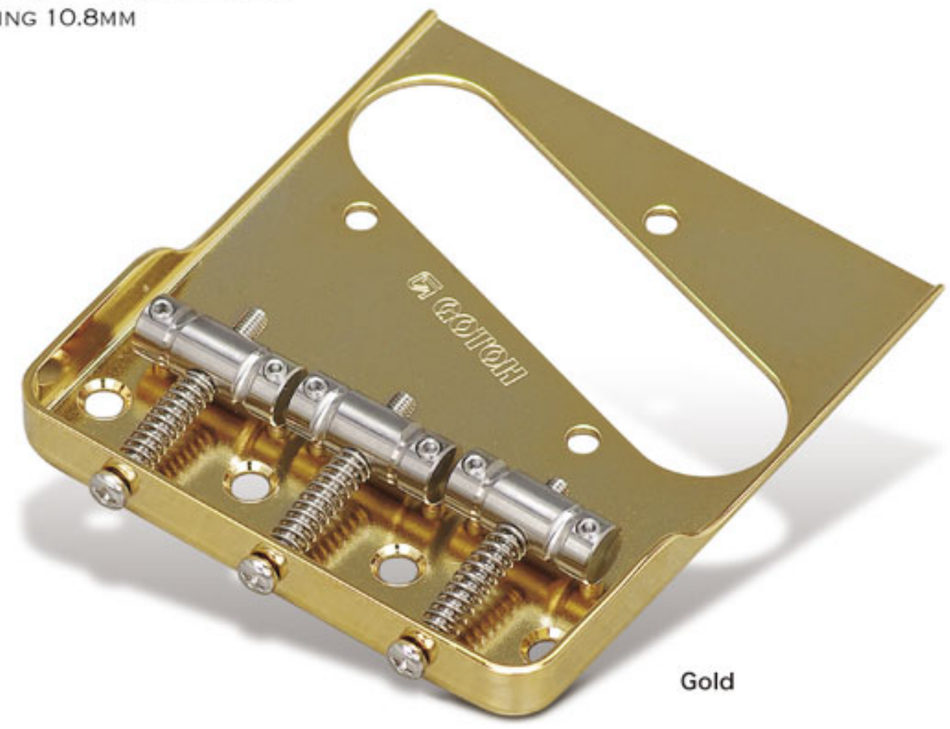

Gold

Ti-TC2

Finishes	C. GG. B. CK (PLATE ONLY)

TITANIUM "IN-TUNE" SADDLE PAT-P.
STRING SPACING 10.8MM
"DUAL - LOADING"
STRING THROUGH BODY AND TOP LOADING

Cosmo Black

Finishes : N (Nickel), **C** (Chrome), **GG** (Gold), **B** (Black Chrome), **CK** (Cosmo Black)

BS-TC1

Finishes	N. C. GG (PLATE ONLY)

BRASS "IN-TUNE" SADDLE PAT-P.
STRING SPACING 10.8MM

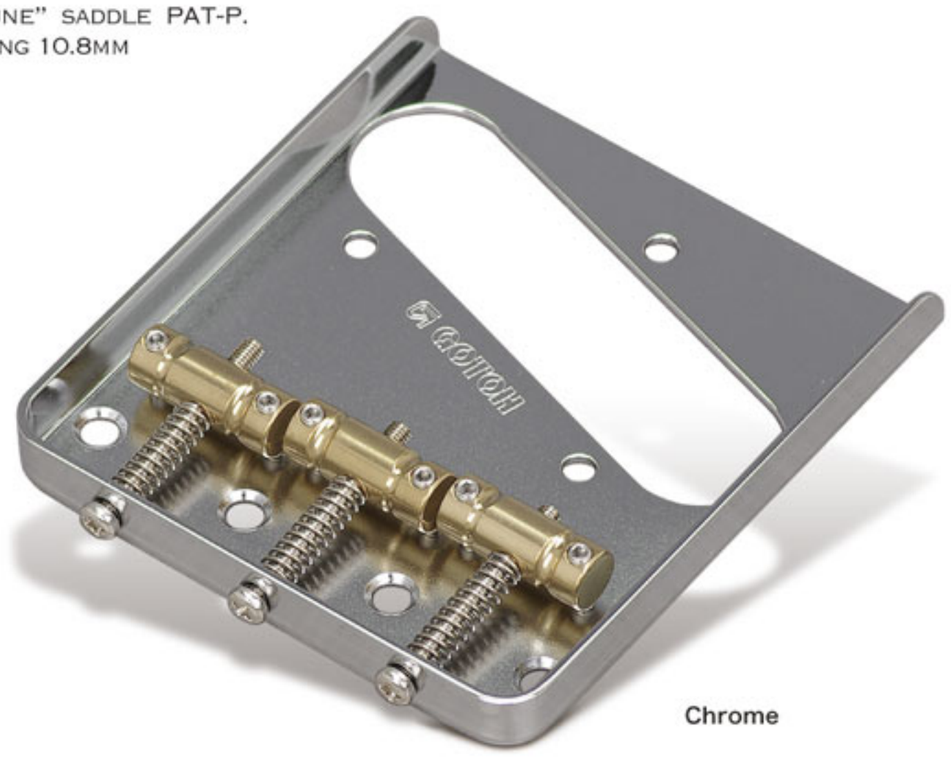

Chrome

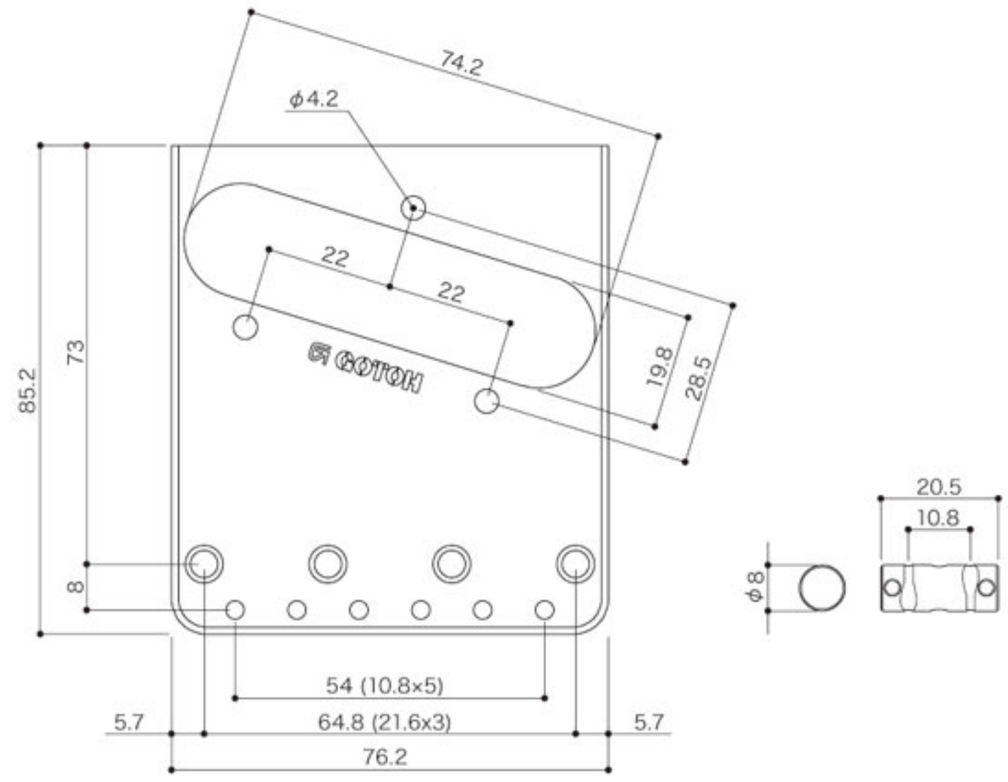

BS-TC1S

Finishes	N. C. GG (PLATE ONLY)

BRASS "IN-TUNE" SADDLE PAT-P.
STRING SPACING 10.8MM

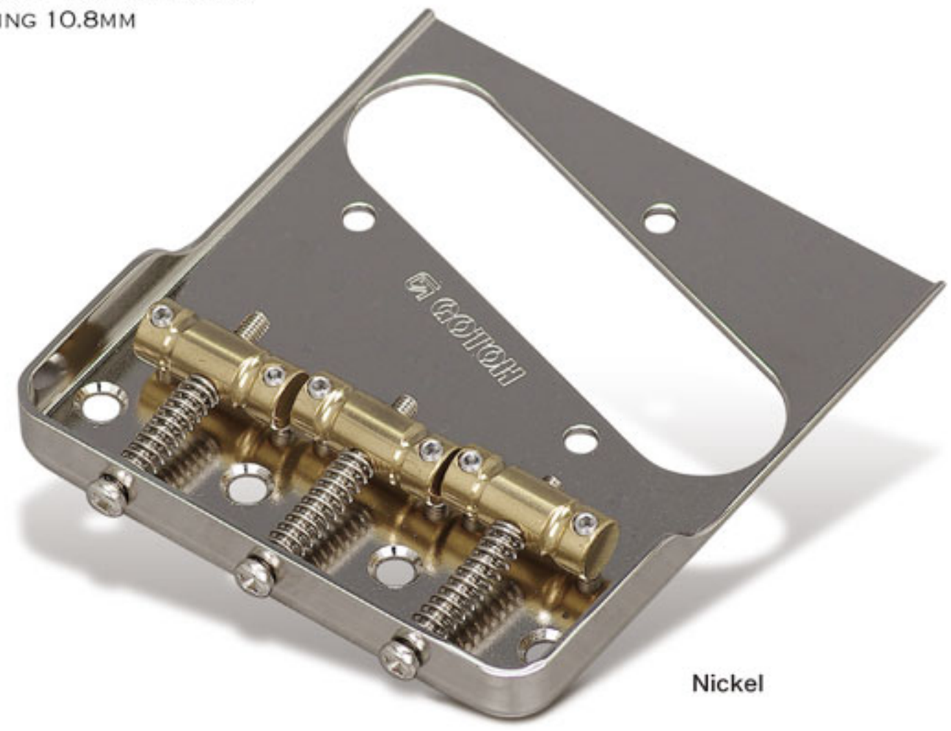

Nickel

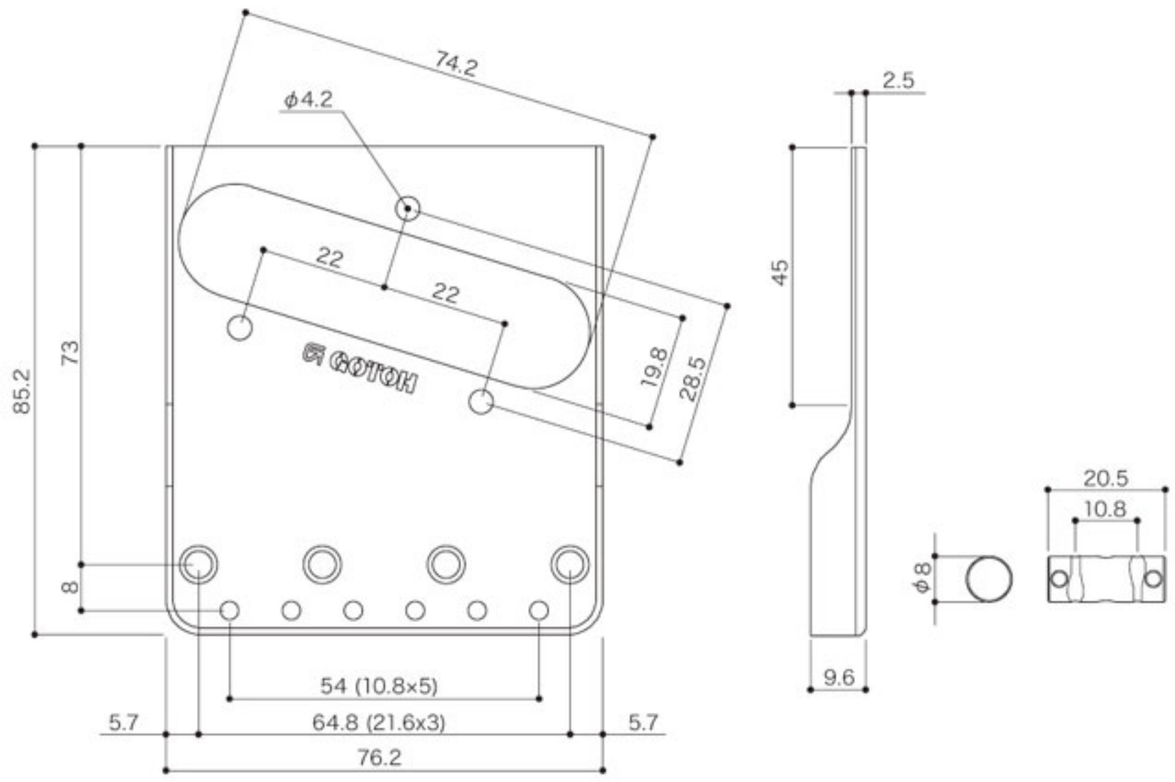

BS-TC2

Finishes	C. GG. B. CK (PLATE ONLY)

BRASS "IN-TUNE" SADDLE PAT-P.
STRING SPACING 10.8MM
"DUAL - LOADING"
STRING THROUGH BODY AND TOP LOADING

Chrome

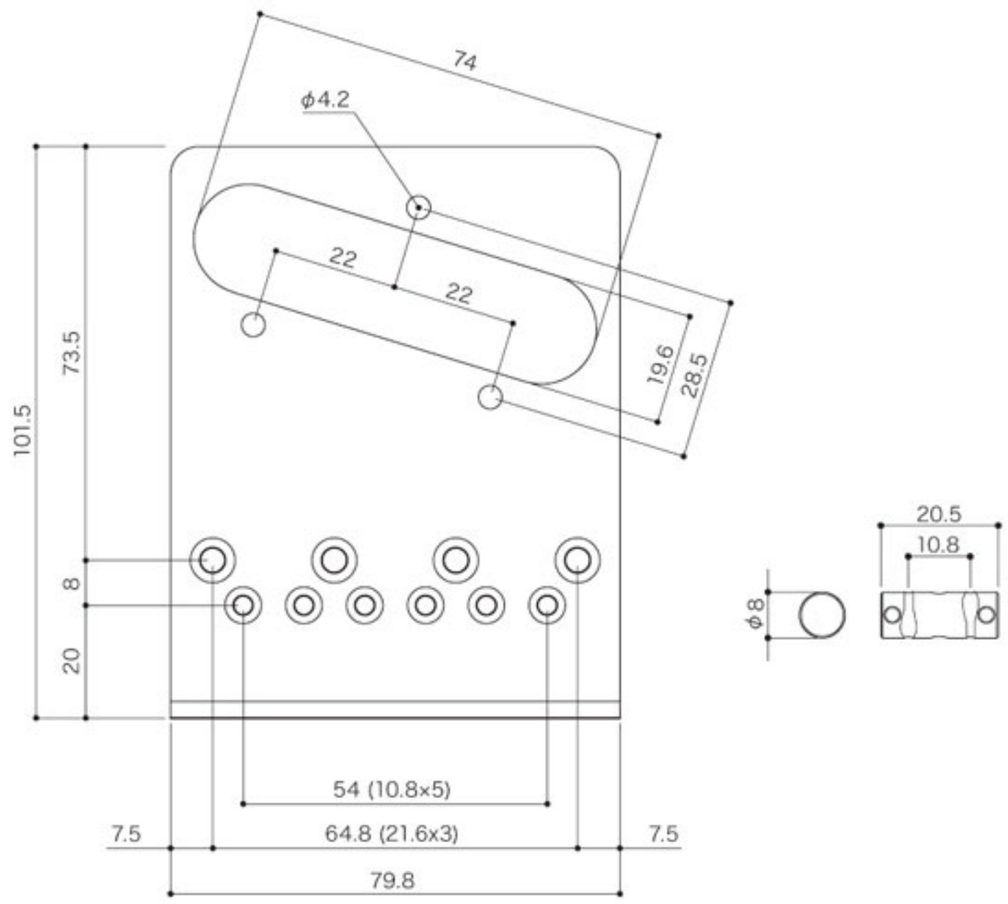

Multi-Tonal Series

With the ability to choose the combination of base plate and saddle freely, the 303/404/ J510 bass bridge series meets the exacting needs of bass players and custom builders. The base plate of the 303 model employs a special duralumin alloy for the plate, which we call "RES-O-LITE".
Thanks to the acoustic features peculiar to RES-O-LITE, string oscillations can be quickly transmitted to the body. The base plate of 404/J510 model using hard zinc with reputed for its tonal quality, produces a more sonorous tone. Combine with a choice of either a steel (SJ), or brass (BO) saddle for each series and you can build an original bridge with a unique sound.

303SJ RES-O-LITE

Finishes	C. GG. B. CK. XN. XC. XG
Plate Material	DURALUMIN
Saddle Material	STEEL
String Spacing	303SJ-4 : 19MM 303SJ-5 : 18MM 303SJ-6 : 18MM

303SJ-4

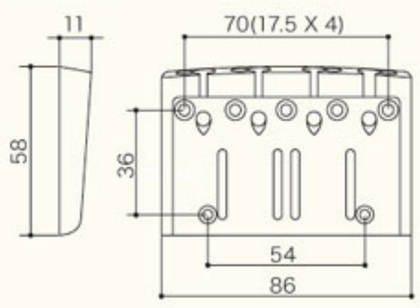

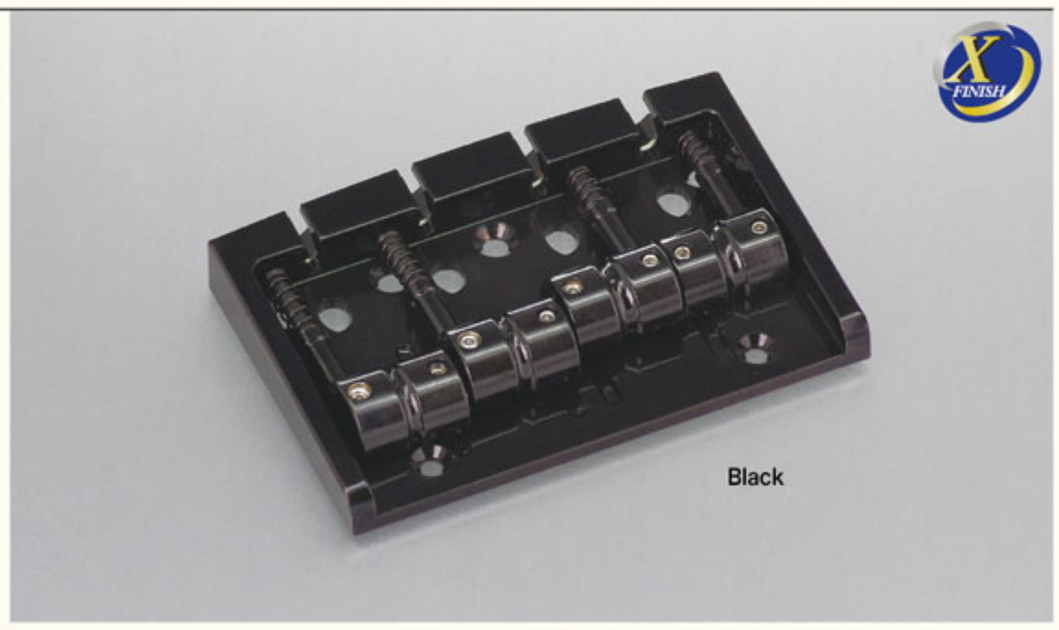

303SJ-5

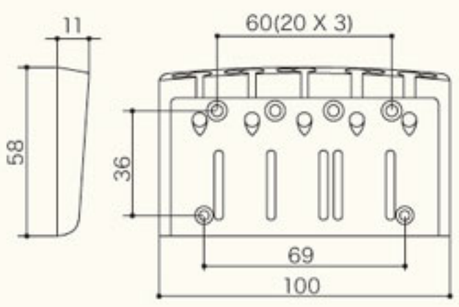

303SJ-6

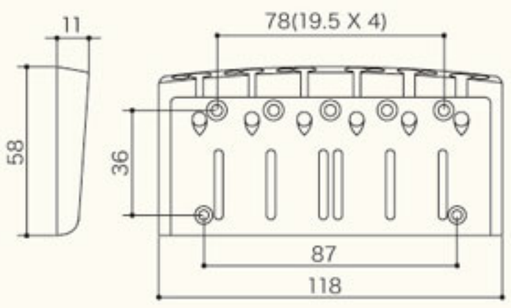

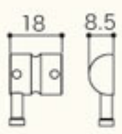

*Saddle size is common.

303BO RES-O-LITE

Finishes	C. GG. B. CK. XN. XC. XG
Plate Material	DURALUMIN
Saddle Material	BRASS
String Spacing	303BO-4 : 19MM 303BO-5 : 18MM 303BO-6 : 18MM

303BO-4

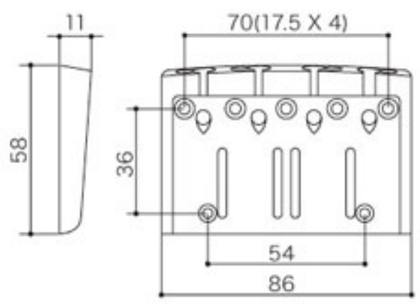

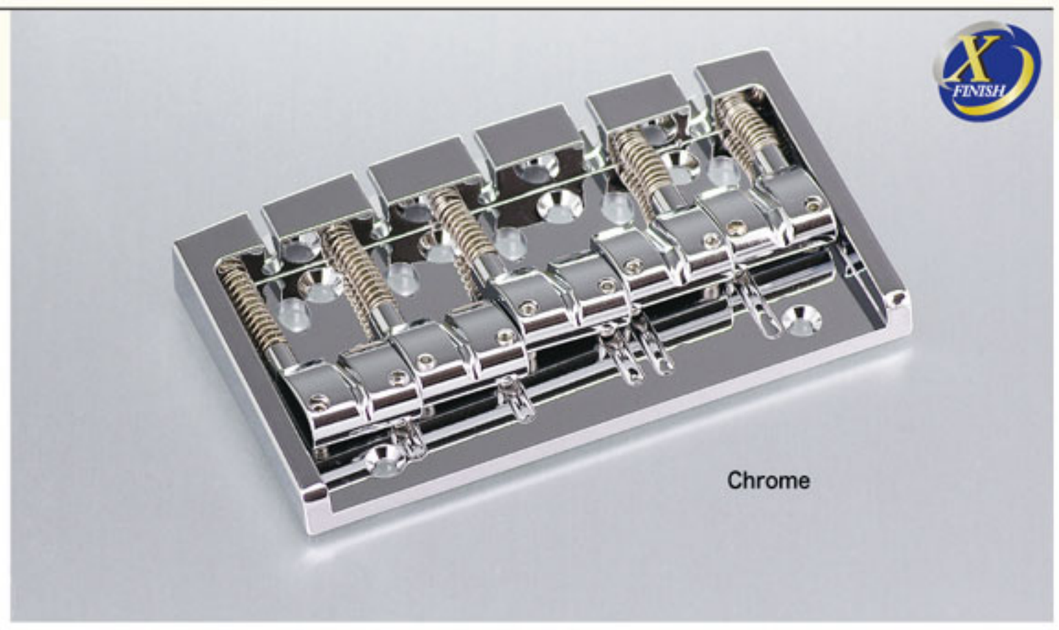

303BO-5

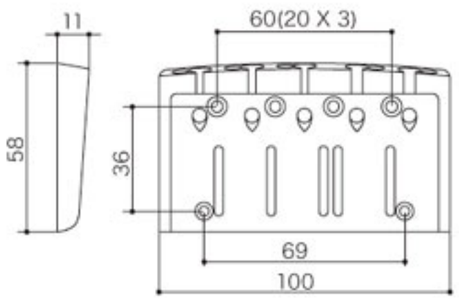

303BO-6

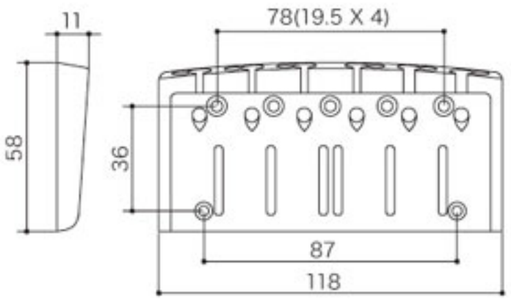

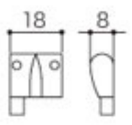

*Saddle size is common.

Finishes : **C** (Chrome), **GG** (Gold), **B** (Black Chrome), **CK** (Cosmo Black), **XN** (X-Nickel), **XC** (X-Chrome), **XG** (X-Gold)

404SJ

Finishes	C. GG. B. CK. XN. XC. XG
Plate Material	HARD ZINC
Saddle Material	STEEL
String Spacing	404SJ-4 : 19MM 404SJ-5 : 18MM

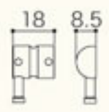

*Saddle size is common.

404SJ-4

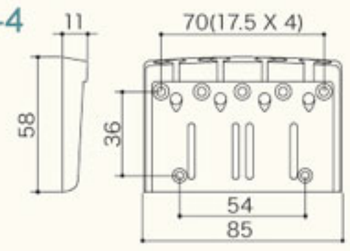

404SJ-5

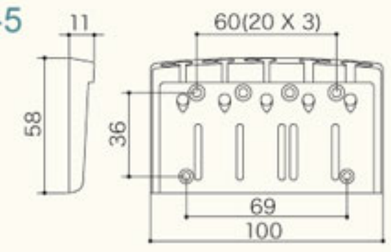

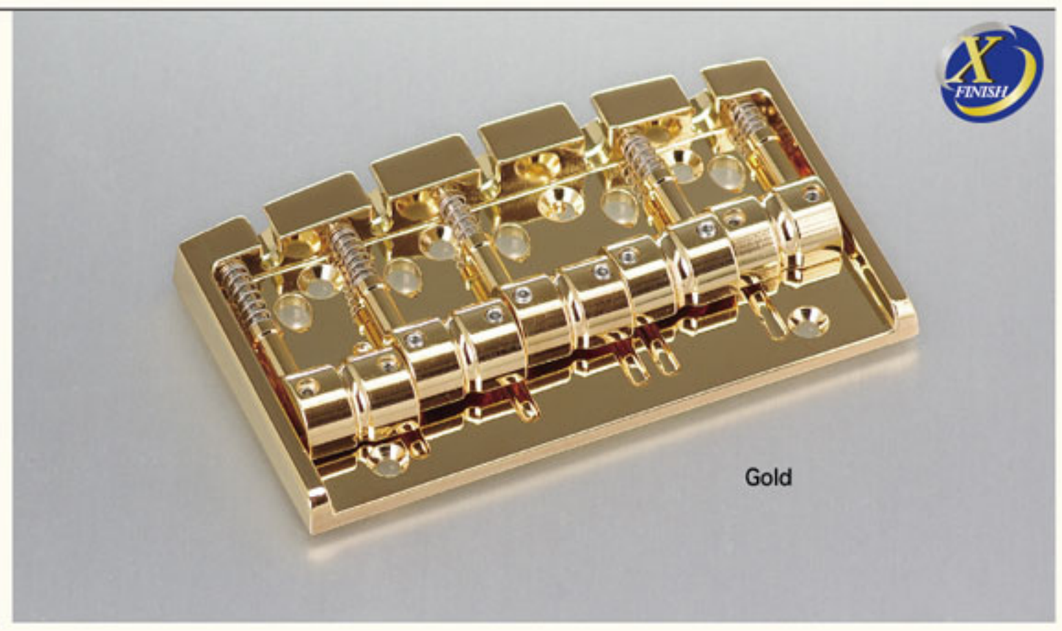

Gold

404BO

Finishes	C. GG. B. CK. XN. XC. XG
Plate Material	HARD ZINC
Saddle Material	BRASS
String Spacing	404BO-4 : 19MM 404BO-5 : 18MM

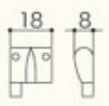

*Saddle size is common.

404BO-4

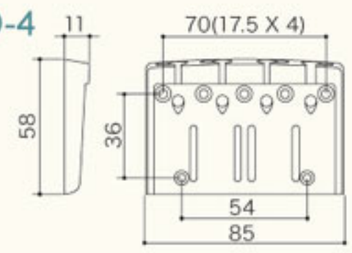

404BO-5

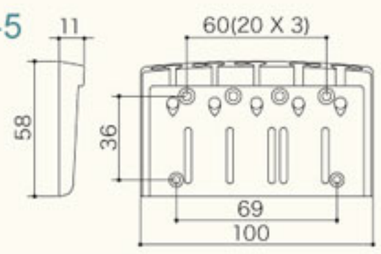

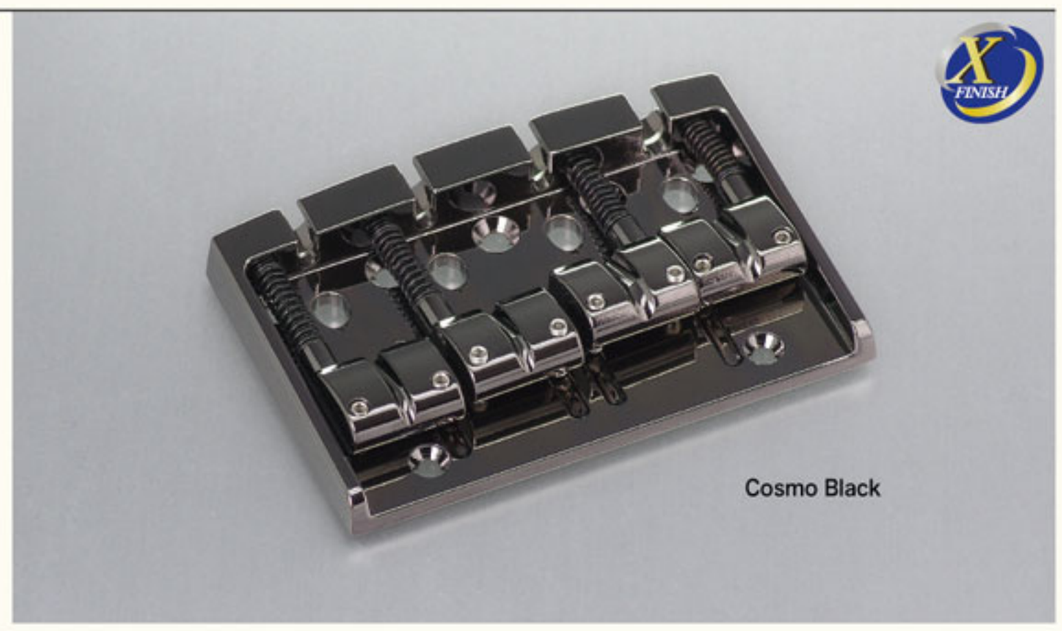

Cosmo Black

J510SJ

Finishes	C. GG. B. CK. XN. XC. XG
Plate Material	HARD ZINC
Saddle Material	STEEL
String Spacing	J510SJ-4 : 19MM J510SJ-5 : 18MM

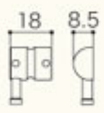

*Saddle size is common.

J510SJ-4

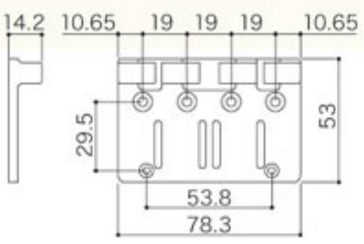

J510SJ-5

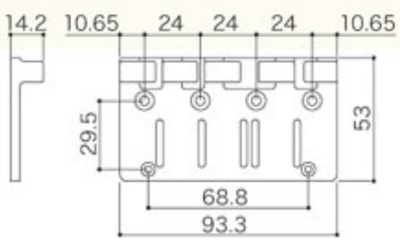

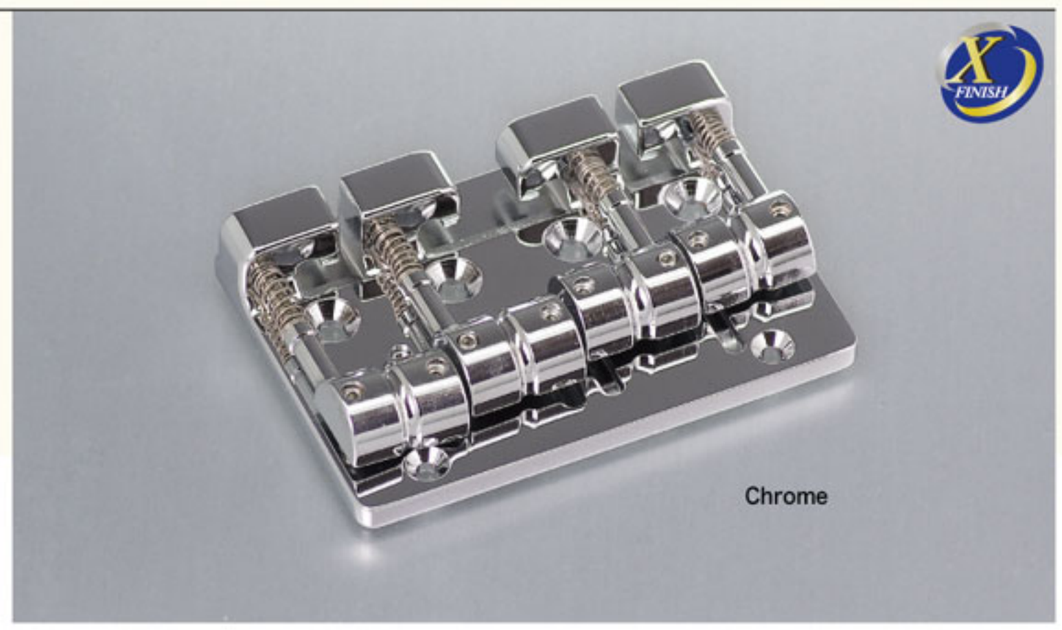

Chrome

J510BO

Finishes	C. GG. B. CK. XN. XC. XG
Plate Material	HARD ZINC
Saddle Material	BRASS
String Spacing	J510BO-4 : 19MM J510BO-5 : 18MM

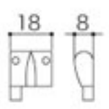

*Saddle size is common.

J510BO-4

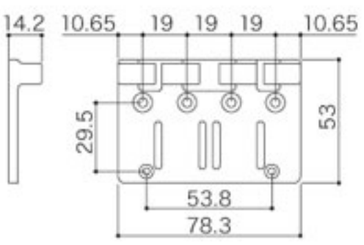

J510BO-5

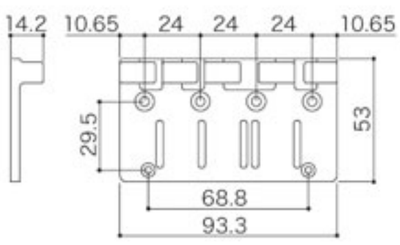

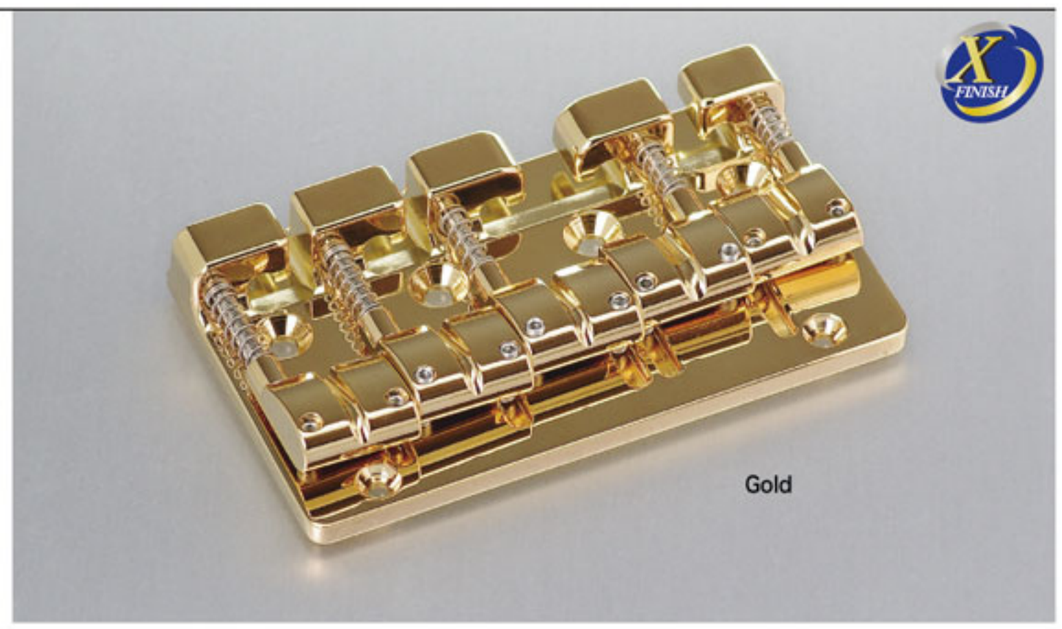

Gold

510 Series

S510B

Finishes	C. GG. B. CK
Plate Material	STEEL
Saddle Material	BRASS
String Spacing	S510B-4 : 19MM S510B-5 : 19MM

The base plate is made of steel and the saddles of brass, all of which have been carved from solid blocks.
This high-density material enhances the transmission of sound and improves sustain in a way that usual die-casting is unable to achieve.
Extra weight for rich low frequencies.

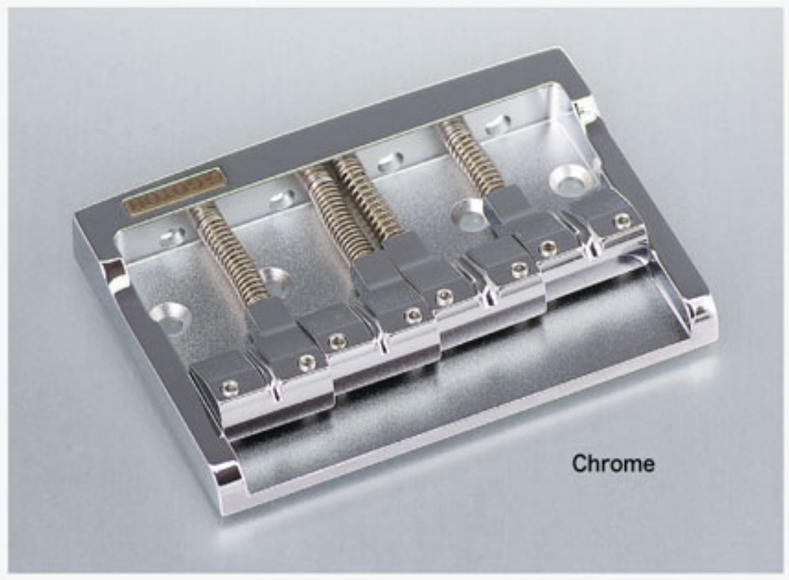
Chrome

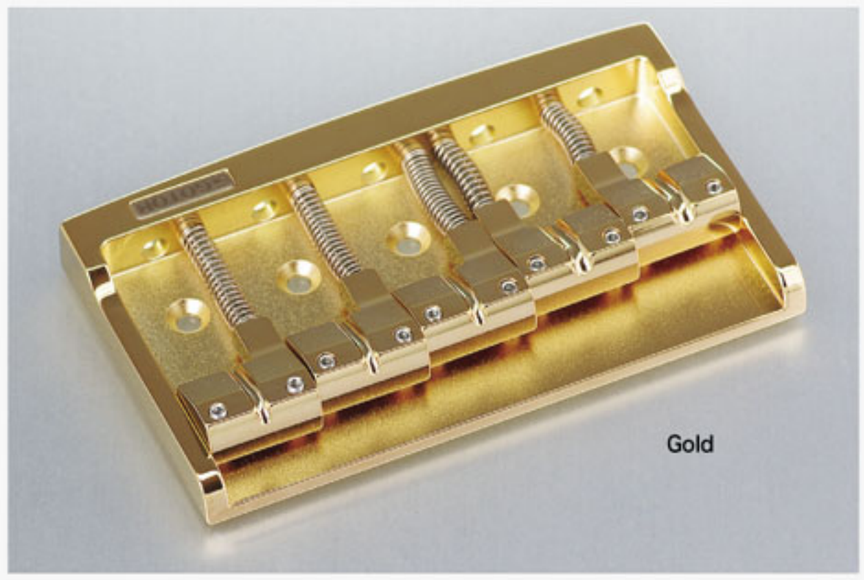
Gold

S510B-4

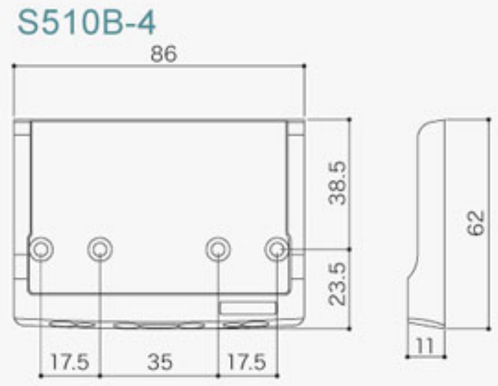

S510B-5

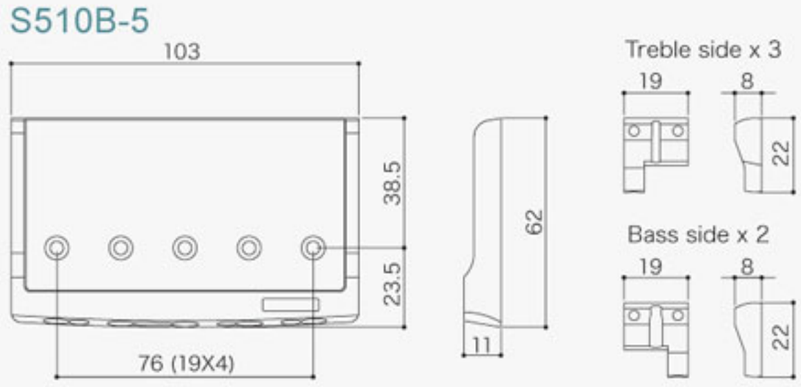

201B-4

Finishes	C. GG. B. CK
Plate Material	ZINC
Saddle Material	BRASS
String Spacing	19MM

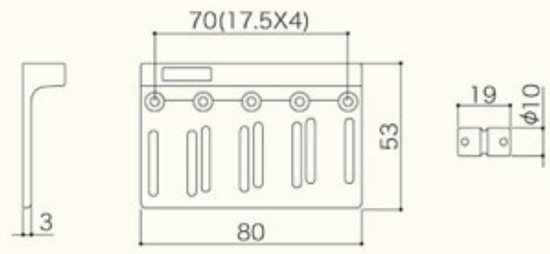

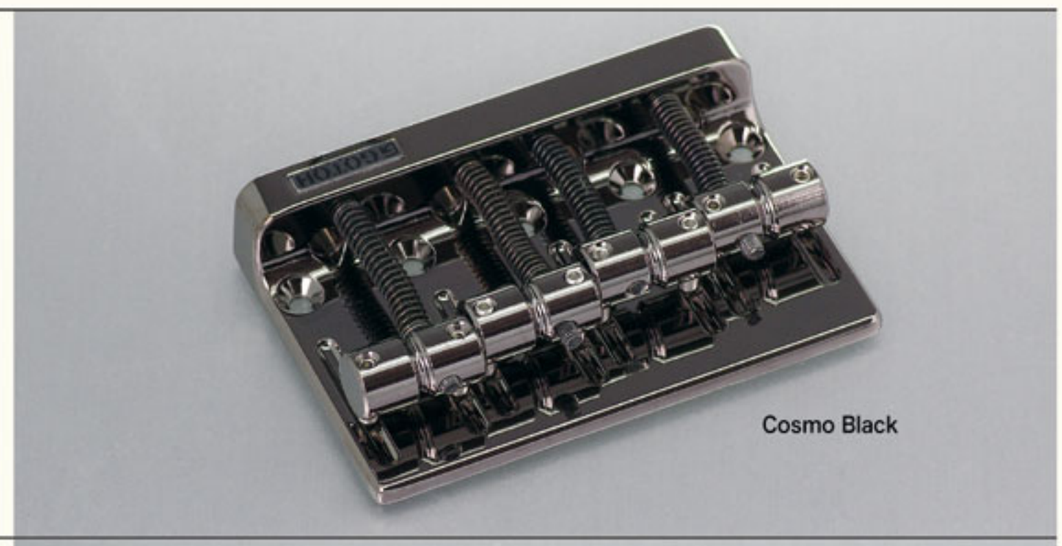
Cosmo Black

203B-4

Finishes	N. C. GG. B. CK
Plate Material	BRASS
Saddle Material	BRASS
String Spacing	19MM

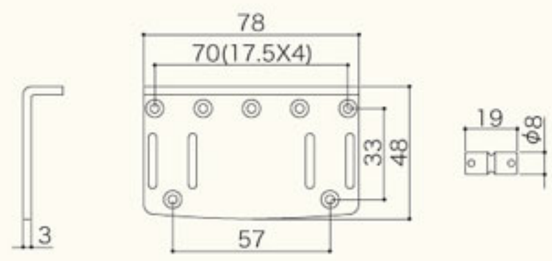

Nickel

205B-5

Finishes	N. C. GG. B. CK
Plate Material	STEEL
Saddle Material	BRASS
String Spacing	18MM

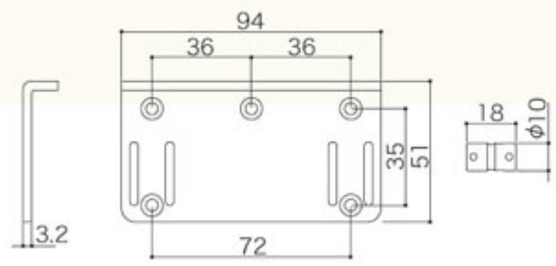

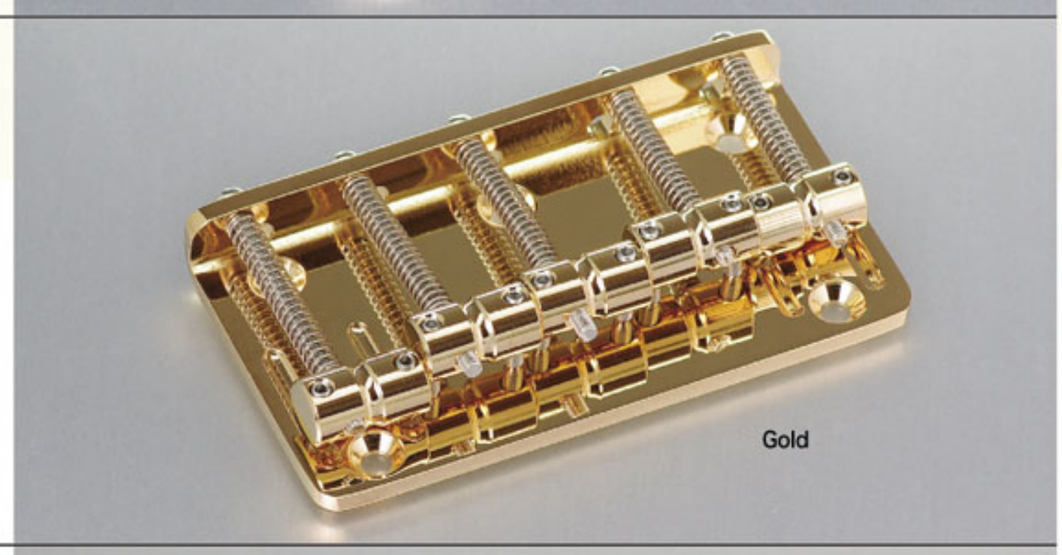
Gold

Ti203B-4

Finishes	N. C. GG. B. CK (PLATE ONLY)
Plate Material	BRASS
Saddle Material	TITANIUM
String Spacing	19MM

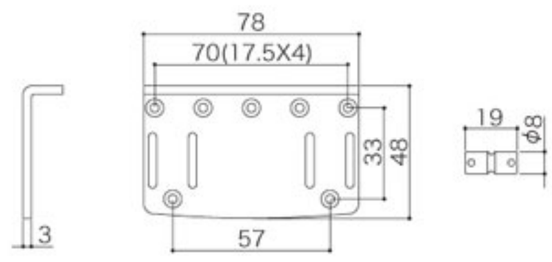

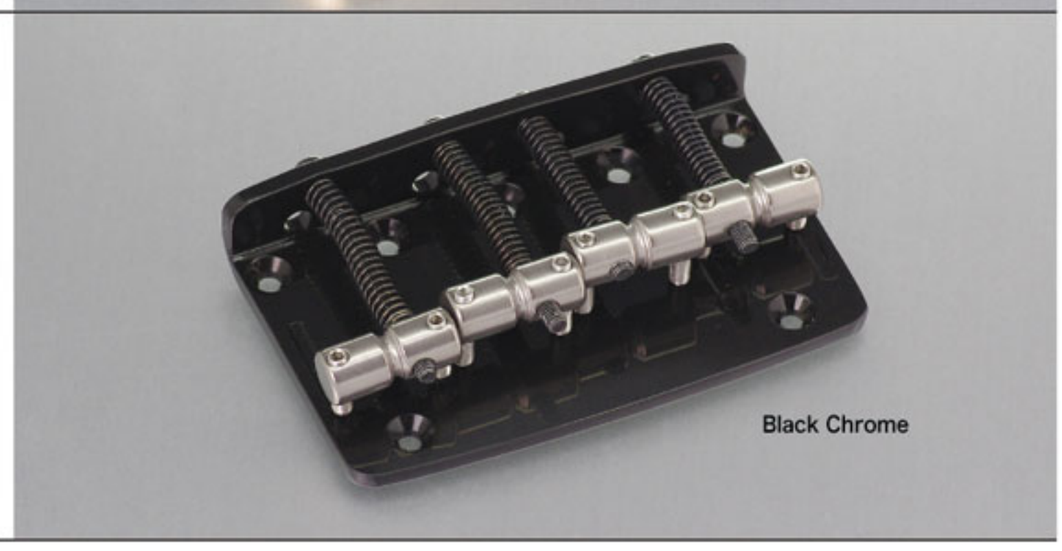
Black Chrome

Finishes : **N** (Nickel), **C** (Chrome), **GG** (Gold), **B** (Black Chrome), **CK** (Cosmo Black)

Accessories

Arms / Saddle Sets / Strap Pin / Free Lock / String Bushing / Jack Cover
Neck Joint Plate / Dome Knob / Control Panel / Tension Bar / String Retainer
Battery Box / Wrench Holder / Spring Hanger / Power Spring / Spring

Arms

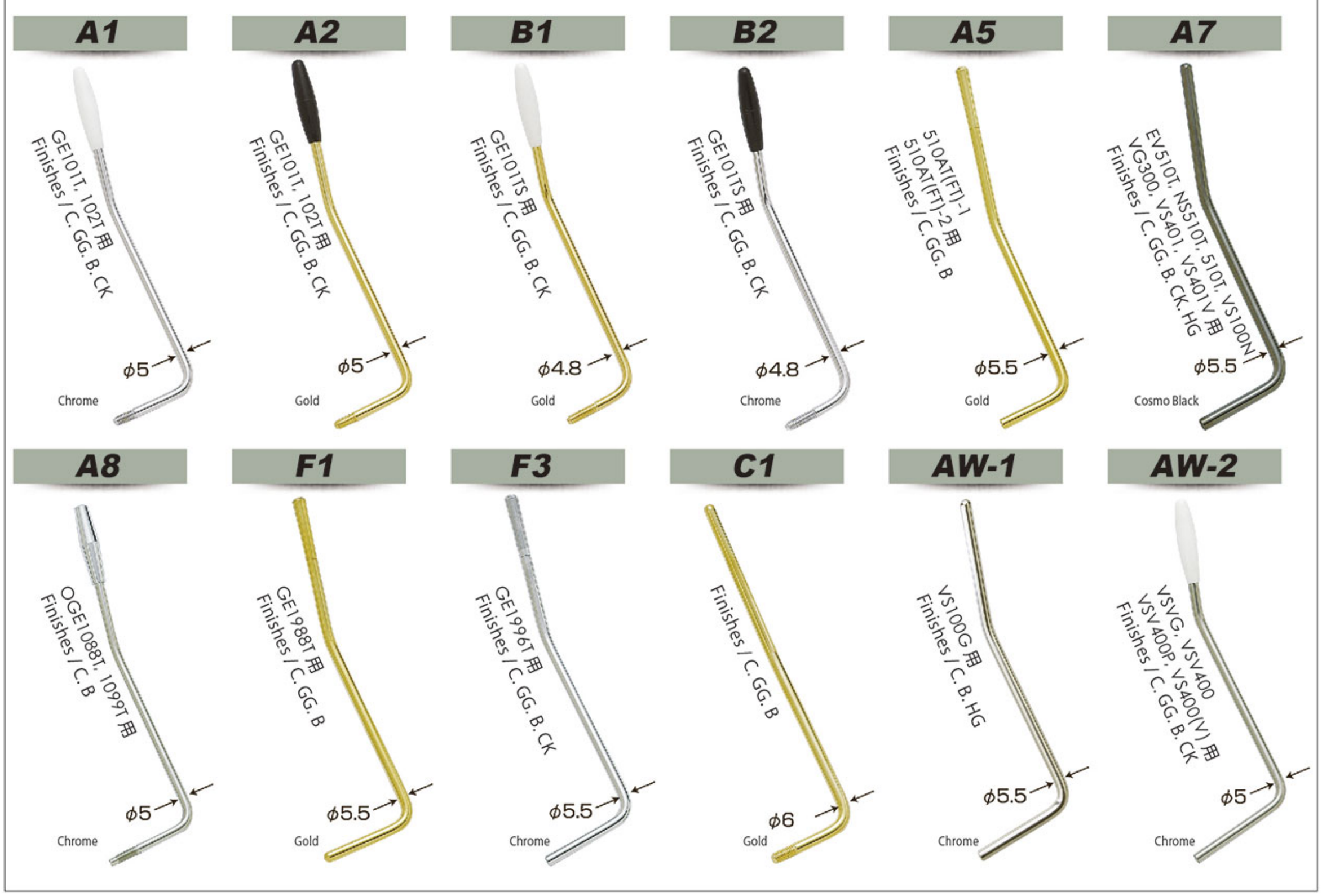

Finishes : C (Chrome), **GG** (Gold), **B** (Black Chrome), **CK** (Cosmo Black), **HG** (Honed Gold)

● SADDLE SETS ● for Guitars

S101

Finishes	N. GG. B. CK
Material	STEEL (SHEET METAL)

6pcs/set

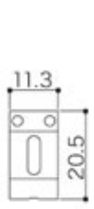

Nickel

S101S

Finishes	N. GG. B. CK
Material	STEEL (SHEET METAL) WITH USA THREADS SCREWS

6pcs/set

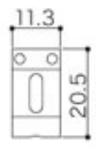

Gold

S102

Finishes	C. GG. B. CK
Material	STEEL

6pcs/set

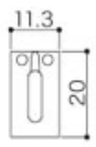

Cosmo Black

S108

Finishes	N. GG. B. CK
Material	STEEL (SHEET METAL)

6pcs/set

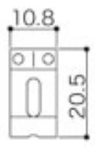

Nickel

S188

Finishes	N. GG. B. CK
Material	STEEL (SHEET METAL)

6pcs/set

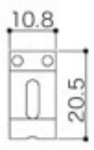

Nickel

S199

Finishes	C. GG. B. CK
Material	STEEL

6pcs/set

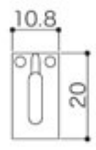

Gold

S11

Finishes	C. GG. B. CK
Material	BRASS

6pcs/set

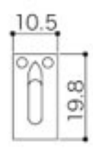

Gold

S21

Finishes	C. GG. B. CK
Material	STEEL

6pcs/set

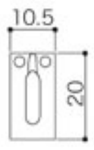

Chrome

S12

Finishes	C. GG. B. CK
Material	BRASS

6pcs/set

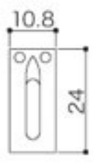

Cosmo Black

S22

Finishes	C. GG. B. CK
Material	STEEL

6pcs/set

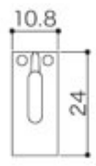

Gold

SW-3

Finish	---
Material	SOLID BRASS

3pcs/set

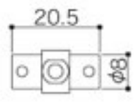

In-Tune Ti

Finish	---
Material	SOLID TITANIUM

3pcs/set

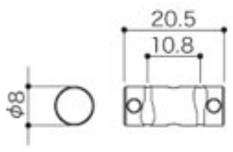

In-Tune BS

Finish	---
Material	SOLID BRASS

3pcs/set

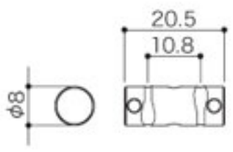

● SADDLE SETS ● for Basses

S201

Finishes	C. GG. B. CK
Material	BRASS

4pcs/set

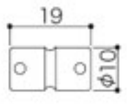

Chrome

S203

Finishes	N. C. GG. B. CK
Material	BRASS

4pcs/set

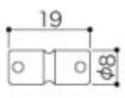

Gold

S205

Finishes	N. C. GG. B. CK
Material	BRASS

5pcs/set

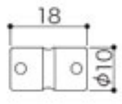

Cosmo Black

S203Ti

Finish	---
Material	SOLID TITANIUM

4pcs/set

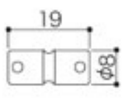

Finishes : **N** (Nickel), **C** (Chrome), **GG** (Gold), **B** (Black Chrome), **CK** (Cosmo Black)

Strap Pin

EP-A1

Solid Aluminum

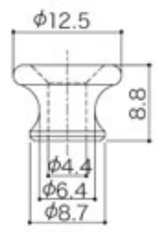

EP-B1

Finishes: N. C. GG. B. CK

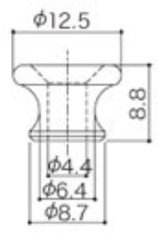

EP-B2

Finishes: N. C. GG. B. CK

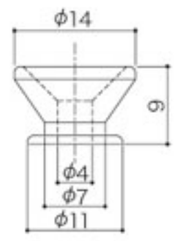

EP-B3

Finishes: N. C. GG. B. CK

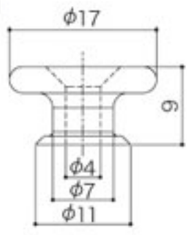

EP-FR2

Finishes: C. GG. B. CK

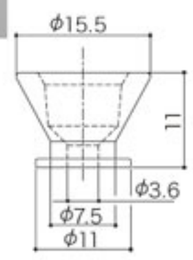

Free Lock

EPR-2

Finishes: C. GG. B. CK

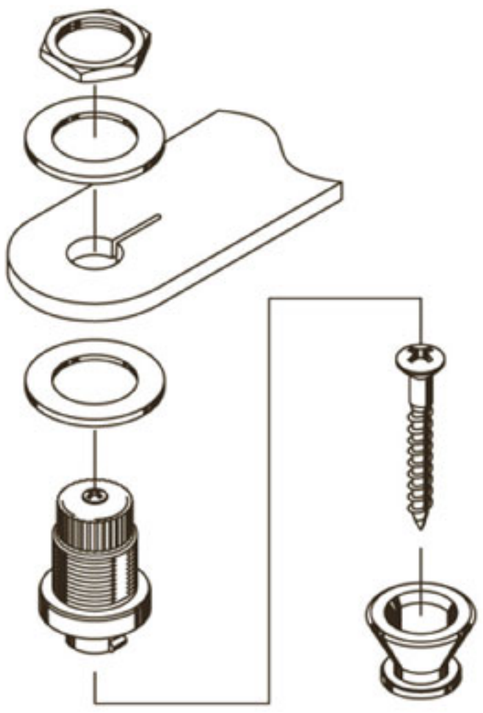

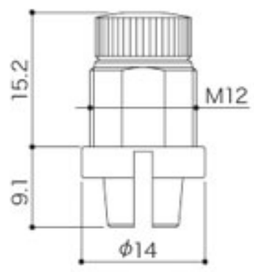

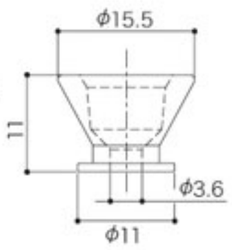

String Bushing

TLB-1

Finishes: N. C. GG. B. CK

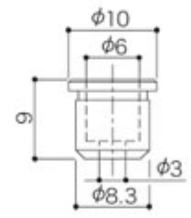

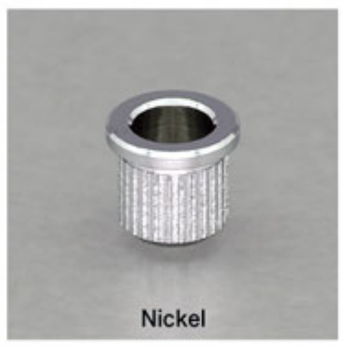

TLB-2

Finishes: N. C. GG. B. CK

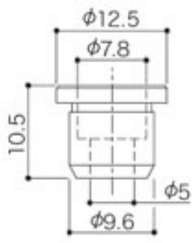

Jack Cover

JCS-1

Finishes: C. GG. B. CK

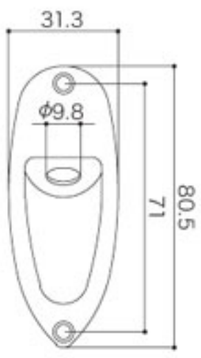

JCB-2

Finishes: C. GG. B. CK

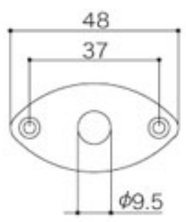

JCB-4

Finishes: C. GG. B. CK

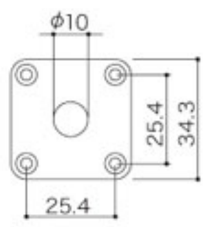

Neck Joint Plate

NBS-3

Finishes: C. GG. B. CK

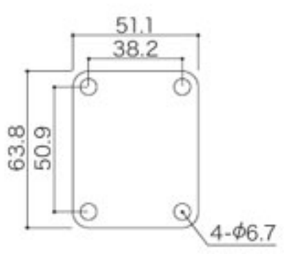

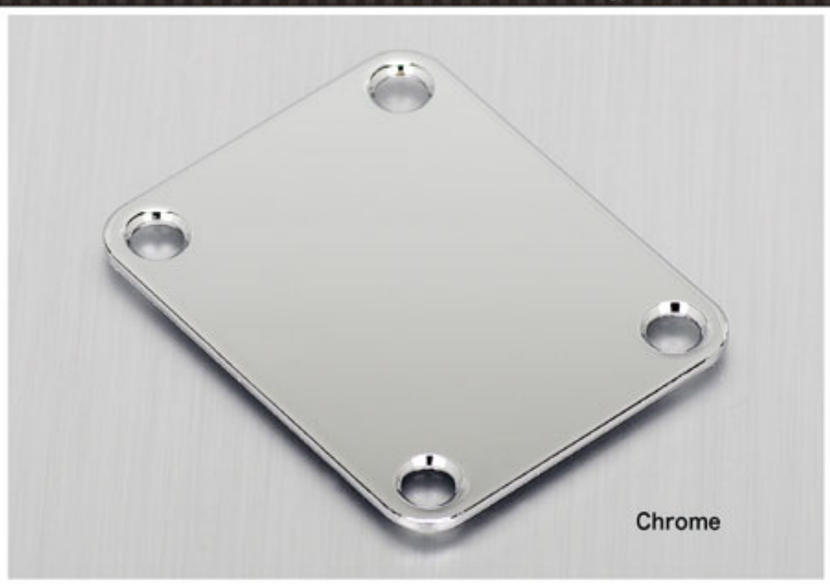

Finishes : **N** (Nickel), **C** (Chrome), **GG** (Gold), **B** (Black Chrome), **CK** (Cosmo Black)

● Dome Knob ●

VK1-18

Finishes C. GG. B. CK

VK1-19

Finishes C. GG. B. CK

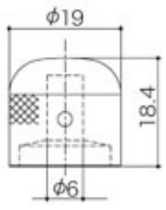

VK3

Finishes C. GG. B. CK

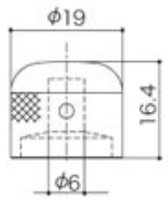

VK15T / VK18T

Finishes C. GG. B. CK

VK15T

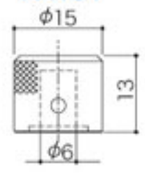

VK18T

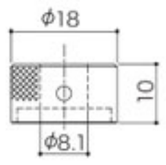

● Control Panel ●

CP-10

Finishes C. GG. B. CK

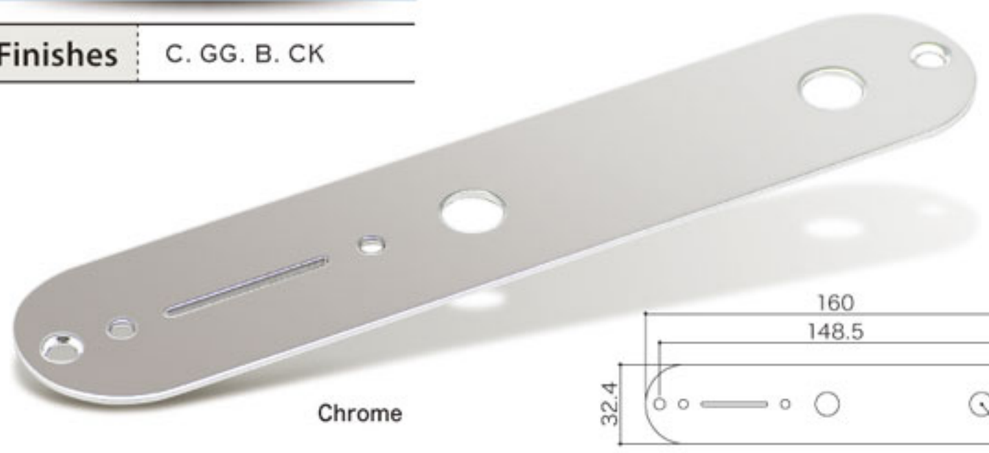

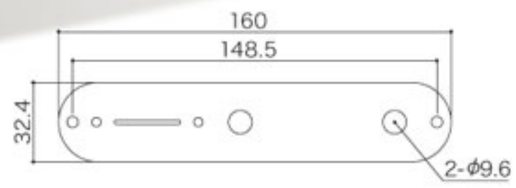

● Tension Bar ●

TB47.5

Finishes C. GG. B. CK

● String Retainer ●

RG15

Finishes N. C. GG. B. CK

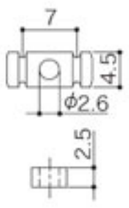

RG30

Finishes N. C. GG. B. CK

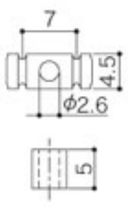

RG105

Finishes N. C. GG. B. CK

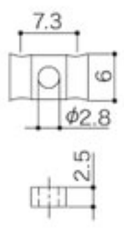

RG130

Finishes N. C. GG. B. CK

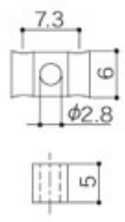

RB20

Finishes N. C. GG. B. CK

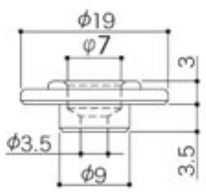

RB30

Finishes N. C. GG. B. CK

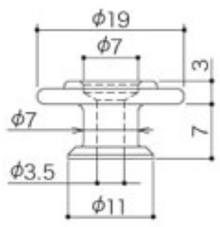

Finishes : N (Nickel), **C** (Chrome), **GG** (Gold), **B** (Black Chrome), **CK** (Cosmo Black)

Battery Box

BB-02

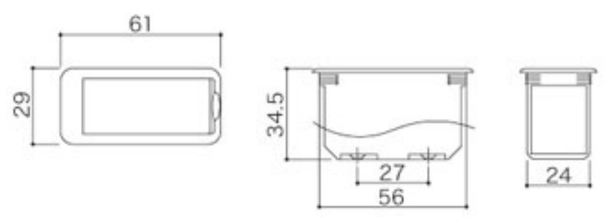

BB-04

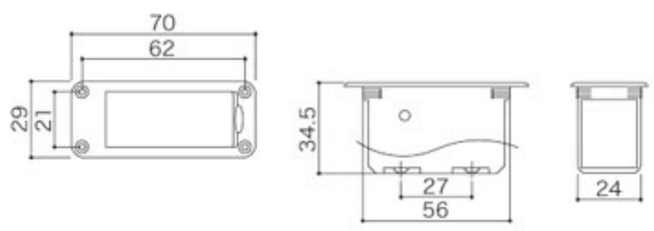

BB-04W

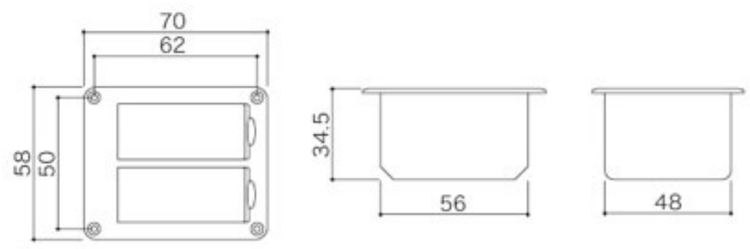

Wrench Holder

WRH-1W

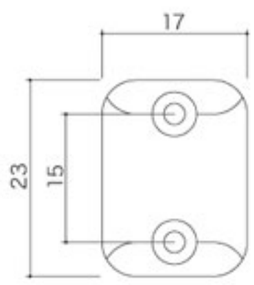

WRH-1

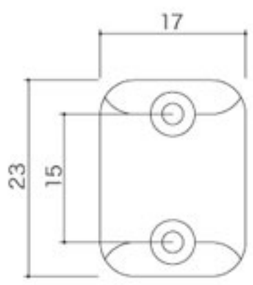

Spring Hanger

SPH

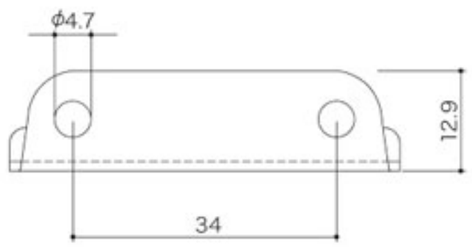

Power Spring

PSP

The tremolo is kept neutral by the balance between string tension and the coil spring attached to its block. As return to a neutral point depends merely on the strength of the coil spring, if the spring is not entirely reliable, the guitar will not accurately come back into tune, especially after pushing the arm down. The power spring has a powerful return capacity, stopping the guitar from going out of tune.

Spring

SP

Luxury Mode

GOTOH The SUPREME GLYPTOGRAPHY is an ultra fine,
high-speed machine carving technology,
which makes instrument parts much more aesthetically pleasing.

Head Type	
String Post	STANDARD
Finishes	C. GG
Gear ratio	1 : 18

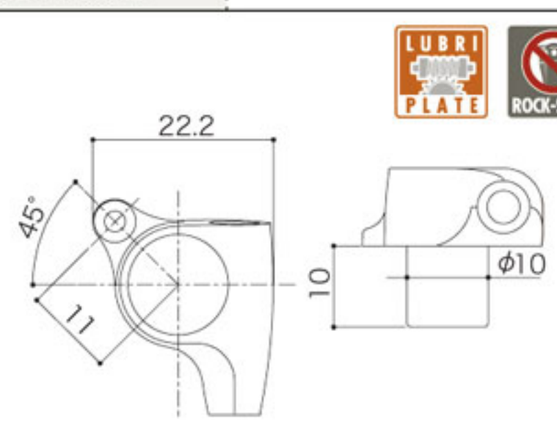

SGS510Z-A20LX

SGS510Z-A60LX

Head Type	
String Post	STANDARD
Finishes	C. GG
Gear ratio	1 : 21

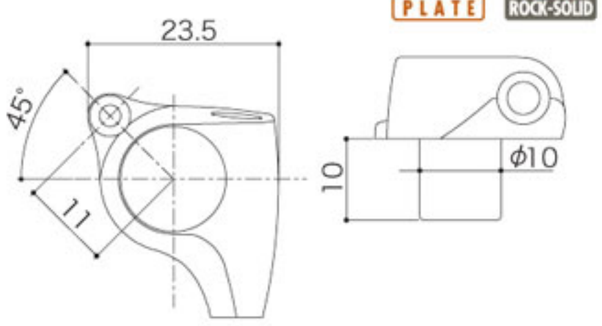

SGL510Z-A20LX

SGL510Z-A60LX

Head Type	
String Post	STANDARD
Finishes	C. GG
Gear ratio	1 : 21

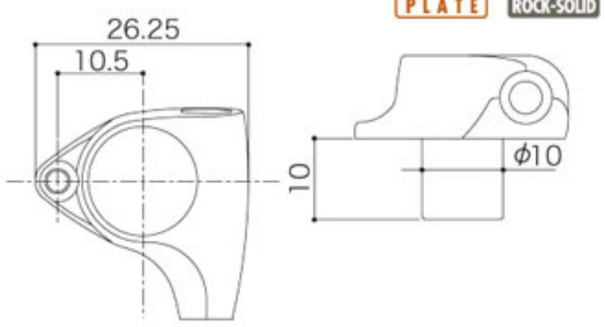

SGV510Z-A20LX

SGV510Z-A60LX

Luxuly Mode Button Dimensions

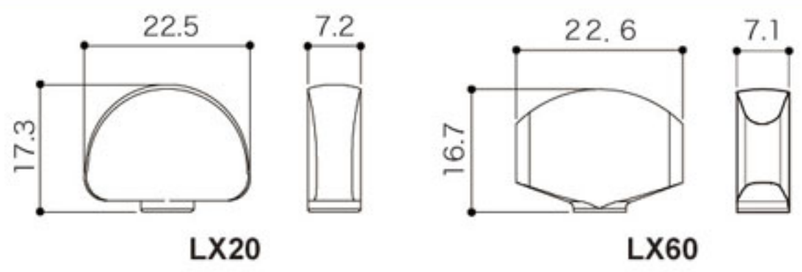

LX20-C

LX20-GG

LX60-C

LX60-GG

Guitar Bridge

GTC-Art

Finishes : C. GG. B. CK

GTC-Art-02

GTC-Art-03
"In-tune" BS Saddle
Dual-loading

Neck Joint Plate

NBS-Art

Finishes : C. GG. B. CK

NBS-Art-02
(Japanese Art)

NBS-Art-01
(Crest)

NBS-Art-04
(Acanthus)

Control Panel

CP-10-Art-01

Finishes : C. GG. B. CK

Control Knob

VK-Art (VK1-19)

Finishes : C. GG. B. CK

VK-Art-01 (Eye of Horus)

VK-Art-02 (Skull)

VK-Art-03 (Cross)

Finishes : C (Chrome), GG (Gold), B (Black Chrome), CK (Cosmo Black)

GOTOH® RELIC

* Relic Series products are limited to specific models and options.
* SD90 with standard string posts and SL buttons.
* SD91 with standard string posts and 05M buttons.
* The process creates unique textures in each individual part.
* It is possible for the texture and appearance to further develop and change depending on operating conditions and age.
* Basic specifications conform to those of the regular product.
* Please check details, such as a dimension, by the each product page or an official web.

RELIC

GENUINE PRODUCT
Best Quality
GOTOH
★★★★★
The Inte
SERIES

SD90
Finish : Aged Nickel
String Post : STANDARD
Gear ratio : 1 : 15
Button : SL

SD91
Finish : Aged Nickel
String Post : STANDARD
Gear ratio : 1 : 15
Button : 05M

GE101TS
Finish : Aged Chrome
Steel block,
Steel saddle(sheet metal)
with U.S.A. threads screws,
String spacing 11.3mm

VK1-19
Finish : Aged Chrome

NBS-3
Finish : Aged Chrome

JCS-1
Finish : Aged Chrome

www.g-gotoh.com

GOTOH®
3040 Miyako-cho, Isesaki, Gunma, 372-0801 Japan TEL 0270-25-3608 FAX 0270-23-8432

Specifications subject to change for further quality improvement without notice.

GOTOH® GUITAR HARDWARE and MACHINE HEADS are sold and serviced by